Centrifugal Pumps for Petroleum, Petrochemical and Natural Gas Industries

ANSI/API Standard 610
Tenth Edition, October 2004

ISO 13709: 2003, (Identical) Centrifugal pumps for petroleum, petrochemical and natural gas industries

American Petroleum Institute

Helping You Get The Job Done Right.SM

Copyright American Petroleum Institute
Reproduced by IHS under license with API

Document provided by IHS Licensee=TECNA/5935100001, 11/02/2004 06:04:35 MST
Questions or comments about this message: please call the Document Policy Group at 303-397-2295.

Copyright American Petroleum Institute
Reproduced by IHS under license with API

Document provided by IHS Licensee=TECNA/5935100001, 11/02/2004 06:04:35 MST
Questions or comments about this message: please call the Document Policy Group
at 303-397-2295.

Special Notes

API publications necessarily address problems of a general nature. With respect to particular circumstances, local, state, and federal laws and regulations should be reviewed.

API is not undertaking to meet the duties of employers, manufacturers, or suppliers to warn and properly train and equip their employees, and others exposed, concerning health and safety risks and precautions, nor undertaking their obligations under local, state, or federal laws.

Information concerning safety and health risks and proper precautions with respect to particular materials and conditions should be obtained from the employer, the manufacturer or supplier of that material, or the material safety data sheet.

Nothing contained in any API publication is to be construed as granting any right, by implication or otherwise, for the manufacture, sale, or use of any method, apparatus, or product covered by letters patent. Neither should anything contained in the publication be construed as insuring anyone against liability for infringement of letters patent.

Generally, API standards are reviewed and revised, reaffirmed, or withdrawn at least every five years. Sometimes a one-time extension of up to two years will be added to this review cycle. This publication will no longer be in effect five years after its publication date as an operative API standard or, where an extension has been granted, upon republication. Status of the publication can be ascertained from the API Standards department telephone (202) 682-8000. A catalog of API publications, programs and services is published annually and updated biannually by API, and available through Global Engineering Documents, 15 Inverness Way East, M/S C303B, Englewood, CO 80112-5776.

This document was produced under API standardization procedures that ensure appropriate notification and participation in the developmental process and is designated as an API standard. Questions concerning the interpretation of the content of this standard or comments and questions concerning the procedures under which this standard was developed should be directed in writing to the Director of the Standards department, American Petroleum Institute, 1220 L Street, N.W., Washington, D.C. 20005. Requests for permission to reproduce or translate all or any part of the material published herein should be addressed to the Director, Business Services.

API standards are published to facilitate the broad availability of proven, sound engineering and operating practices. These standards are not intended to obviate the need for applying sound engineering judgment regarding when and where these standards should be utilized. The formulation and publication of API standards is not intended in any way to inhibit anyone from using any other practices.

Any manufacturer marking equipment or materials in conformance with the marking requirements of an API standard is solely responsible for complying with all the applicable requirements of that standard. API does not represent, warrant, or guarantee that such products do in fact conform to the applicable API standard.

All rights reserved. No part of this work may be reproduced, stored in a retrieval system, or transmitted by any means, electronic, mechanical, photocopying, recording, or otherwise, without prior written permission from the publisher. Contact the Publisher, API Publishing Services, 1220 L Street, N.W., Washington, D.C. 20005.

Copyright © 2004 American Petroleum Institute

--`,,`,`,`,,`,```,,,,`,,,,`,,,`,,,`,,,`,,,`,,,`,,,`,,,`,,,`,,,`,,,`---

Copyright American Petroleum Institute
Reproduced by IHS under license with API

Document provided by IHS Licensee=TECNA/5935100001, 11/02/2004 06:04:35 MST
Questions or comments about this message: please call the Document Policy Group
at 303-397-2295.

API Foreword

API publications may be used by anyone desiring to do so. Every effort has been made by the Institute to assure the accuracy and reliability of the data contained in them; however, the Institute makes no representation, warranty, or guarantee in connection with this publication and hereby expressly disclaims any liability or responsibility for loss or damage resulting from its use or for the violation of any federal, state, or municipal regulation with which this publication may conflict.

Suggested revisions are invited and should be submitted to API, Standards department, 1220 L Street, NW, Washington, DC 20005, standards@api.org.

--`,`,`,`,`,```,,,`,,,`,,,,,`,,,`-`-`,,`,,`,`,,`---

Copyright American Petroleum Institute
Reproduced by IHS under license with API

Document provided by IHS Licensee=TECNA/5935100001, 11/02/2004 06:04:35 MST
Questions or comments about this message: please call the Document Policy Group
at 303-397-2295.

Contents

Page

API Foreword ii
Foreword v
Introduction vi
1 Scope 1
2 Normative references 1
3 Terms and definitions 4
4 Classification and designation 9
4.1 General 9
4.2 Pump designations 10
4.3 Units and governing requirements 16
5 Basic design 16
5.1 General 16
5.2 Pump types 20
5.3 Pressure casings 21
5.4 Nozzles and pressure casing connections 23
5.5 External nozzle forces and moments 25
5.6 Rotors 31
5.7 Wear rings and running clearances 33
5.8 Mechanical shaft seals 34
5.9 Dynamics 37
5.10 Bearings and bearing housings 46
5.11 Lubrication 49
5.12 Materials 50
5.13 Nameplates and rotation arrows 55
6 Accessories 55
6.1 Drivers 55
6.2 Couplings and guards 58
6.3 Baseplates 59
6.4 Instrumentation 62
6.5 Piping and appurtenances 62
6.6 Special tools 63
7 Inspection, testing, and preparation for shipment 64
7.1 General 64
7.2 Inspection 64
7.3 Testing 66
7.4 Preparation for shipment 70
8 Specific pump types 71
8.1 Single-stage overhung pumps 71
8.2 Between-bearings pumps (types BB1 through BB5) 73
8.3 Vertically suspended pumps (types VS1 through VS7) 78
9 Vendor's data 84
9.1 General 84
9.2 Proposals 85
9.3 Contract data 88
Annex A (informative) Specific speed and suction-specific speed 90
Annex B (normative) Cooling water and lubrication system schematics 91
Annex C (normative) Hydraulic power recovery turbines 102

--`,,`,,`,`,,`,`,,`,,,,,,,,,,,,`,,`,`,,`,`,,`---

Copyright American Petroleum Institute
Reproduced by IHS under license with API

Document provided by IHS Licensee=TECNA/5935100001, 11/02/2004 06:04:35 MST
Questions or comments about this message: please call the Document Policy Group at 303-397-2295.

Annex D (normative) **Standard baseplates** **106**
Annex E (informative) **Inspector's checklist** **108**
Annex F (normative) **Criteria for piping design** **110**
Annex G (informative) **Materials class selection guidance** **124**
Annex H (normative) **Materials and material specifications for pump parts** **126**
Annex I (normative) **Lateral analysis** **136**
Annex J (normative) **Determination of residual unbalance** **142**
Annex K (normative) **Seal chamber runout illustrations** **148**
Annex L (informative) **Vendor drawing and data requirements** **149**
Annex M (informative) **Test data summary** **158**
Annex N (informative) **Pump datasheets** **162**
Bibliography **181**

Copyright American Petroleum Institute
Reproduced by IHS under license with API
Document provided by IHS Licensee=TECNA/5935100001, 11/02/2004 06:04:35 MST
Questions or comments about this message: please call the Document Policy Group

Foreword

ISO (the International Organization for Standardization) is a worldwide federation of national standards bodies (ISO member bodies). The work of preparing International Standards is normally carried out through ISO technical committees. Each member body interested in a subject for which a technical committee has been established has the right to be represented on that committee. International organizations, governmental and non-governmental, in liaison with ISO, also take part in the work. ISO collaborates closely with the International Electrotechnical Commission (IEC) on all matters of electrotechnical standardization.

International Standards are drafted in accordance with the rules given in the ISO/IEC Directives, Part 2.

The main task of technical committees is to prepare International Standards. Draft International Standards adopted by the technical committees are circulated to the member bodies for voting. Publication as an International Standard requires approval by at least 75 % of the member bodies casting a vote.

Attention is drawn to the possibility that some of the elements of this document may be the subject of patent rights. ISO shall not be held responsible for identifying any or all such patent rights.

ISO 13709 was prepared by Technical Committee ISO/TC 115, *Pumps*, Subcommittee SC 3, *Installation and special application*, in collaboration with Technical Committee ISO/TC 67, *Materials, equipment and offshore structures for petroleum, petrochemical and natural gas industries*, SC 6, *Processing equipment and systems*.

Copyright American Petroleum Institute
Reproduced by IHS under license with API
Document provided by IHS Licensee=TECNA/5935100001, 11/02/2004 06:04:35 MST
Questions or comments about this message: please call the Document Policy Group

Introduction

This edition of API Standard 610 is the identical national adoption of ISO 13709:2003, with the exception of editorial changes made since the release of ISO 13709:2003. API Standard 610, 10th edition, is technically equivalent to ISO 13709:2003.

Users of this International Standard should be aware that further or differing requirements may be needed for individual applications. This International Standard is not intended to inhibit a vendor from offering, or the purchaser from accepting alternative equipment or engineering solutions for the individual application. This may be particularly appropriate where there is innovative or developing technology. Where an alternative is offered, the vendor should identify any variations from this International Standard and provide details.

Annex A specifies calculations for specific speed and suction-specific speed.

Annex B contains schematic drawings of cooling water and lubrication systems.

Annex C specifies requirements for hydraulic power recovery turbines.

Annex D specifies requirements for standard baseplates.

Annex E contains an inspector's checklist.

Annex F specifies criteria for piping design.

Annex G give guidance on material class selection.

Annex H specifies requirements and gives guidance on materials selection.

Annex I specifies requirements for lateral analysis.

Annex J specifies requirements for determining residual unbalance.

Annex K contains seal chamber runout illustrations.

Annex L contains forms which may be used to indicate vendor drawing and data requirements.

Annex M contains forms which may be used to record test data.

Annex N contains data sheets which purchasers are encouraged to use.

A bullet (●) at the beginning of a clause or subclause indicates that either a decision is required or further information is to be provided by the purchaser. This information should be indicated on data sheets or stated in the enquiry or purchase order (see examples in Annex N).

In this International Standard, where practical, US Customary units are included in brackets for information.

--`,`,`,`,```,,,`,,,`,,,,,`,,-`-`,,`,,`,`,,`---

Copyright American Petroleum Institute
Reproduced by IHS under license with API

Document provided by IHS Licensee=TECNA/5935100001, 11/02/2004 06:04:35 MST
Questions or comments about this message: please call the Document Policy Group at 303-397-2295.

Centrifugal pumps for petroleum, petrochemical and natural gas industries

1 Scope

This International Standard specifies requirements for centrifugal pumps, including pumps running in reverse as hydraulic power recovery turbines, for use in petroleum, petrochemical and gas industry process services.

This International Standard is applicable to overhung pumps, between-bearings pumps and vertically-suspended pumps (see Table 1). Clause 8 provides requirements applicable to specific types of pump. All other clauses of this International Standard are applicable to all pump types. Illustrations are provided of the various specific pump types and the designations assigned to each specific type.

This International Standard is not applicable to sealless pumps.

2 Normative references

The following referenced documents are indispensable for the application of this document. For dated references, only the edition cited applies. For undated references, the latest edition of the referenced document (including any amendments) applies.

ISO 7-1, *Pipe threads where pressure-tight joints are made on the threads — Part 1: Dimensions, tolerances and designation*

ISO 228-1, *Pipe threads where pressure-tight joints are not made on the threads — Part 1: Dimensions, tolerances and designation*

ISO 261, *ISO general-purpose metric screw threads — General plan*

ISO 262, *ISO general-purpose metric screw threads — Selected sizes for screws, bolts and nuts*

ISO 281, *Rolling bearings — Dynamic load ratings and rating life*

ISO 286 (all parts), *ISO system of limits and fits*

ISO 724, *ISO general-purpose metric screw threads — Basic dimensions*

ISO 965 (all parts), *ISO general-purpose metric screw threads — Tolerances*

ISO 1940-1, *Mechanical vibration — Balance quality requirements of rigid rotors — Part 1: Specification and verification of balance tolerances*

ISO 4200, *Plain end steel tubes, welded and seamless — General tables of dimensions and masses per unit length*

ISO 5753, *Rolling bearings — Radial internal clearance*

ISO 7005-1, *Metallic flanges — Part 1: Steel flanges*

ISO 7005-2, *Metallic flanges — Part 2: Cast iron flanges*

Copyright American Petroleum Institute
Reproduced by IHS under license with API
Document provided by IHS Licensee=TECNA/5935100001, 11/02/2004 06:04:35 MST
Questions or comments about this message: please call the Document Policy Group

ISO 8501 (all parts), *Preparation of steel substrates before application of paints and related products — Visual assessment of surface cleanliness*

ISO 9906, *Rotodynamic pumps — Hydraulic performance acceptance tests — Grades 1 and 2*

ISO 10436, *Petroleum and natural gas industries — General-purpose steam turbines for refinery service*

ISO 10438 (all parts), *Petroleum and natural gas industries — Lubrication, shaft-sealing and control-oil systems and auxiliaries*

ISO 10441, *Petroleum and natural gas industries — Flexible couplings for mechanical power transmission — Special purpose applications*

ISO 11342, *Mechanical Vibration — Methods and criteria for the mechanical balancing of flexible rotors*

ISO 14691, *Petroleum and natural gas industries — Flexible couplings for mechanical power transmission — General purpose applications*

ISO 15649, *Petroleum and natural gas industries — Piping*

ISO 21049:2004, *Pumps — Shaft sealing systems for centrifugal and rotary pumps*

IEC 60034-1, *Rotating electrical machines — Part 1: Rating and performance*

IEC 60079 (all parts), *Electrical apparatus for explosive gas atmosphere*

EN 287 (all parts), *Approval testing of welders — Fusion welding* [1)]

EN 288, *Specification and approval of welding procedures for metallic materials*

EN 13445 (all parts), *Unfired pressure vessels*

ABMA 7, *Shaft and housing fits for metric radial ball and roller bearings* [2)]

AGMA 9000, *Flexible couplings — Potential unbalance classification* [3)]

AGMA 9002, *Bores and keyways for flexible couplings (inch series)*

API 541, *Form-wound squirrel-cage induction motors — 250 horsepower and larger*

API 611, *General purpose steam turbines for refinery service*

API 670, *Noncontacting vibration and axial position monitoring system*

API 671, *Special-purpose couplings for refinery service*

API 677, *General-purpose gear units for petroleum, chemical and gas industry services*

ASME B1.1, *Unified inch screw threads, UN and UNR thread form* [4)]

ASME B15.1, *Safety standard for mechanical power transmission apparatus*

---

1) Comité Européen de Normalization, 36, rue de Stassart, B-1050 Brussels, Belgium.

2) American Bearing Manufacturers Association, 2025 M Street, NW, Suite 800, Washington, DC 20036, USA.

3) American Gear Manufacturers Association, 1500 King Street, Suite 201, Alexandria, VA 22314, USA.

4) American Society of Mechanical Engineers, Three Park Avenue, New York, NY 10016-5990, USA.

Copyright American Petroleum Institute
Reproduced by IHS under license with API
Document provided by IHS Licensee=TECNA/5935100001, 11/02/2004 06:04:35 MST
Questions or comments about this message: please call the Document Policy Group

ASME B16.1, *Cast iron pipe flanges and flanged fittings classes 25, 125 and 250*

ASME B16.5, *Pipe flanges and flanged fittings NPS 1/2 through NPS 24*

ASME B16.11, *Forged fittings, socket-welding and threaded*

ASME B16.42, *Ductile iron pipe flanges and flanged fittings classes 150 and 300*

ASME B16.47, *Large diameter steel flanges NPS 26 through NPS 60*

ASME B17.1, *Keys and keyseats*

ASME, *Boiler and pressure vessel code, Section V, Nondestructive examination*

ASME, *Boiler and pressure vessel code, Section VIII, Pressure vessels*

ASME, *Boiler and pressure vessel code, Section IX, Welding and brazing qualifications*

AWS D1.1, *Structural welding code — Steel* [5)]

DIN 910, *Heavy-duty hexagon head screw plugs* [6)]

HI 1.3, *Centrifugal pumps — Horizontal baseplate design* [7)]

HI 1.6, *Centrifugal pump test*

HI 2.6, *Vertical pump test*

IEEE 841, *Standard for petroleum and chemical industry — Severe duty totally enclosed fan-cooled (TEFC) squirrel cage induction motors — Up to and including 370 kW (500 hp)* [8)]

MSS-SP-55, *Quality standard for steel castings for valves, flanges and fittings and other piping components — Visual method for evaluation of surface irregularities* [9)]

NACE MR0175, *Sulfide stress cracking resistant metallic materials for oilfield equipment item No. 21304* [10)]

NFPA 70, *National electrical code handbook* [11)]

SSPC SP 6, *Surface Preparation Specification* [12)]

---

5) American Welding Society, 550 North LeJeune Road, Miami, FL 33136, USA.

6) Deutsches Institut für Normung, Burggrafenstrasse 6, Berlin, Germany D-10787.

7) Hydraulics Institute, 9 Sylvan Way, Parsippany NJ, 07054, USA.

8) Institute of Electrical & Electronics Engineers, 445 Hoes Lane, Piscataway, NJ 08855-1331.

9) Manufacturers Standardization Society of The Valve and Fittings Industry Inc., 127 Park Street N.E., Vienna, VA 22180-4602, USA.

10) National Association of Corrosion Engineers, 1440 South Creek Drive, Houston, TX 77084-4906, USA.

11) National Fire Protection Association, 1 Batterymarch Park, Quincy, MA 02269-9101, USA.

12) Society for Protective Coatings, 40 24th Street, 6th Floor, Pittsburgh, PA 15222-4643, USA.

Copyright American Petroleum Institute
Reproduced by IHS under license with API
Document provided by IHS Licensee=TECNA/5935100001, 11/02/2004 06:04:35 MST
Questions or comments about this message: please call the Document Policy Group

3 Terms and definitions

For the purposes of this document, the following terms and definitions apply.

3.1
axially split
split with the principal joint parallel to the shaft centreline

3.2
barrel pump
horizontal pump of the double-casing type

3.3
barrier fluid
fluid, at a higher pressure than the process pressure being sealed, introduced between pressurized dual (double) mechanical seals to completely isolate the pump process liquid from the environment

3.4
best efficiency point
BEP
flowrate at which a pump achieves its highest efficiency

3.5
buffer fluid
fluid, at a lower pressure than the process pressure being sealed, used as a lubricant or buffer between unpressurized dual (tandem) mechanical seals

3.6
critical speed
shaft rotational speed at which the rotor-bearing-support system is in a state of resonance

3.7
dry critical speed
rotor critical speed calculated assuming that there are no liquid effects, that the rotor is supported only at its bearings and that the bearings are of infinite stiffness

3.8
wet critical speed
rotor critical speed calculated considering the additional support and damping produced by the action of the pumped liquid within internal running clearances at the operating conditions and allowing for flexibility and damping within the bearings

3.9
datum elevation
elevation to which values of NPSH are referred

cf. **net positive suction head** (3.28)

3.10
double casing
type of pump construction in which the pressure casing is separate from the pumping elements contained in the casing

NOTE Examples of pumping elements include diffuser, diaphragms, bowls and volute inner casings.

3.11
drive train component
item of the equipment used in series to drive the pump

EXAMPLES Motor, gear, turbine, engine, fluid drive, clutch.

Copyright American Petroleum Institute
Reproduced by IHS under license with API
Document provided by IHS Licensee=TECNA/5935100001, 11/02/2004 06:04:35 MST
Questions or comments about this message: please call the Document Policy Group

3.12
element
bundle
assembly of the rotor plus the internal stationary parts of a centrifugal pump

3.13
cartridge-type element
assembly of all the parts of the pump except for the casing

3.14
hydraulic power recovery turbine
turbomachine designed to recover power from a fluid stream

3.15
hydrodynamic bearing
bearing that uses the principles of hydrodynamic lubrication

3.16
maximum allowable speed
highest speed at which the manufacturer's design permits continuous operation

3.17
maximum allowable temperature
maximum continuous temperature for which the manufacturer has designed the pump (or any part to which the term is referred) when handling the specified fluid at the specified maximum operating pressure

3.18
maximum allowable working pressure
MAWP
maximum continuous pressure for which the manufacturer has designed the pump (or any part to which the term is referred) when handling the specified fluid at the specified maximum operating temperature

3.19
maximum continuous speed
highest rotational speed at which the pump, as built, is capable of continuous operation with the specified fluid at any of the specified operating conditions

3.20
maximum discharge pressure
maximum specified suction pressure plus the maximum differential pressure the pump with the furnished impeller is able to develop when operating at rated speed with fluid of the specified normal relative density (specific gravity)

3.21
maximum dynamic sealing pressure
highest pressure expected at the seals during any specified operating condition and during start-up and shut-down

3.22
maximum static sealing pressure
highest pressure, excluding pressures encountered during hydrostatic testing, to which the seals can be subjected while the pump is shut down

3.23
maximum suction pressure
highest suction pressure to which the pump is subjected during operation

Copyright American Petroleum Institute
Reproduced by IHS under license with API
Document provided by IHS Licensee=TECNA/5935100001, 11/02/2004 06:04:35 MST
Questions or comments about this message: please call the Document Policy Group

3.24
minimum allowable speed
lowest speed (in revolutions per minute) at which the manufacturer's design permits continuous operation

3.25
minimum continuous stable flow
lowest flow at which the pump can operate without exceeding the vibration limits imposed by this International Standard

3.26
minimum continuous thermal flow
lowest flow at which the pump can operate without its operation being impaired by the temperature rise of the pumped liquid

3.27
minimum design metal temperature
lowest mean metal temperature (through the thickness) expected in service, including operation upsets, auto-refrigeration and temperature of the surrounding environment

3.28
net positive suction head
NPSH
total absolute suction pressure determined at the suction nozzle and referred to the datum elevation, minus the vapour pressure of the liquid

NOTE It is expressed in metres (feet) of head of the pumped liquid.

3.29
net positive suction head available
NPSHA
NPSH determined by the purchaser for the pumping system with the liquid at the rated flow and normal pumping temperature

3.30
net positive suction head required
NPSHR
NPSH that results in a 3 % loss of head (first stage head in a multistage pump) determined by the vendor by testing with water

3.31
nominal pipe size
NPS
designation, usually followed by a size designation number, corresponding approximately to the outside diameter of the pipe expressed in inches

3.32
normal operating point
point at which the pump is expected to operate under normal process conditions

3.33
normal-wear part
part normally restored or replaced at each pump overhaul

EXAMPLES Wear rings, interstage bushings, balancing device, throat bushing, seal faces, bearings and gaskets.

3.34
observed
inspection or test where the purchaser is notified of the timing of the inspection or test and the inspection or test is performed as scheduled, regardless of whether the purchaser or his representative is present

Copyright American Petroleum Institute
Reproduced by IHS under license with API
Document provided by IHS Licensee=TECNA/5935100001, 11/02/2004 06:04:35 MST
Questions or comments about this message: please call the Document Policy Group

3.35
oil mist lubrication
lubrication provided by oil mist produced by atomisation in a central unit and transported to the bearing housing, or housings, by compressed air

3.36
pure oil mist lubrication
⟨dry sump⟩ systems in which the mist both lubricates the bearing(s) and purges the housing and there is no oil level in the sump

3.37
purge oil mist lubrication
⟨wet sump⟩ systems in which the mist only purges the bearing housing

3.38
operating region
portion of a pump's hydraulic coverage over which the pump operates

3.39
allowable operating region
portion of a pump's hydraulic coverage over which the pump is allowed to operate, based on vibration within the upper limit of this International Standard or temperature rise or other limitation; specified by the manufacturer

3.40
preferred operating region
portion of a pump's hydraulic coverage over which the pump's vibration is within the base limit of this International Standard

3.41
overhung pump
pump whose impeller is cantilevered from its bearing assembly

3.42
pressure casing
composite of all stationary pressure-containing parts of the pump, including all nozzles, seal glands, seal chambers and other attached parts but excluding the stationary and rotating members of mechanical seals

3.43
purchaser
owner, or owner's agent, that issues the order and specification to the vendor

3.44
radially split
split with the principal joint perpendicular to the shaft centreline

3.45
rated operating point
point at which the vendor certifies that pump performance is within the tolerances stated in this International Standard

NOTE Normally the rated operating point is the specified operating point with the highest flow.

3.46
relative density
specific gravity
property of a liquid expressed as the ratio of the liquid's density to that of water at 4 °C (39,2 °F)

Copyright American Petroleum Institute
Reproduced by IHS under license with API
Document provided by IHS Licensee=TECNA/5935100001, 11/02/2004 06:04:35 MST
Questions or comments about this message: please call the Document Policy Group

3.47
rotor
assembly of all the rotating parts of a centrifugal pump

3.48
specific speed
index relating flow, total head and rotational speed for pumps of similar geometry

See Annex A.

3.49
standby service
normally idle or idling piece of equipment that is capable of immediate automatic or manual start-up and continuous operation

3.50
suction-specific speed
index relating flow, NPSHR and rotative speed for pumps of similar geometry

See Annex A.

3.51
throat bushing
device that forms a restrictive close clearance around the sleeve (or shaft) between the seal and the impeller

3.52
total indicator reading
total indicated runout
TIR
difference between the maximum and minimum readings of a dial indicator or similar device, monitoring a face or cylindrical surface, during one complete revolution of the monitored surface

NOTE For a perfectly cylindrical surface, the indicator reading implies an eccentricity equal to half the reading. For a perfectly flat face the indicator reading gives an out-of-squareness equal to the reading. If the diameter in question is not perfectly cylindrical or flat, interpretation of the meaning of TIR is more complex and may represent ovality or lobing.

3.53
trip speed
⟨electric motor driver⟩ synchronous speed at maximum supply frequency

3.54
trip speed
⟨variable-speed driver⟩ speed at which the independent emergency overspeed device operates to shut down the driver

3.55
unit responsibility
responsibility for coordinating the documentation, delivery and technical aspects of the equipment and all auxiliary systems included in the scope of the order

NOTE The technical aspects to be considered include but are not limited to such factors as the power requirements, speed, rotation, general arrangement, couplings, dynamics, lubrication, sealing system, material test reports, instrumentation, piping, conformance to specifications and testing of components.

3.56
vendor
supplier
manufacturer or manufacturer's agent that supplies the equipment and is normally responsible for service support

--`,`,`,`,```,,,`,,,`,,,,,`,,-`-`,,`,,`,`,,`---
Copyright American Petroleum Institute
Reproduced by IHS under license with API
Document provided by IHS Licensee=TECNA/5935100001, 11/02/2004 06:04:35 MST
Questions or comments about this message: please call the Document Policy Group

3.57
vertical in-line pump
vertical-axis pump whose suction and discharge connections have a common centreline that intersects the shaft axis

NOTE The pump's driver is generally mounted directly on the pump.

3.58
vertically suspended pump
vertical-axis pump whose liquid end is suspended from a column and mounting plate

NOTE The pump's liquid end is usually submerged in the pumped liquid.

3.59
witnessed
type of inspection or test for which the purchaser is notified of the timing of the inspection or test and a hold is placed on the inspection or test until the purchaser or his representative is in attendance

4 Classification and designation

4.1 General

The pumps described in this International Standard are classified and designated as shown in Table 1.

Table 1 — Pump classification type identification

Pump type			Orientation		Type code
Centrifugal pumps	Overhung	Flexibly coupled	Horizontal	Foot-mounted	OH1
				Centreline-supported	OH2
			Vertical in-line with bearing bracket		OH3
		Rigidly coupled	Vertical in-line		OH4
		Close-coupled	Vertical in-line		OH5
			High-speed integrally geared		OH6
	Between-bearings	1- and 2-stage	Axially split		BB1
			Radially split		BB2
		Multistage	Axially split		BB3
			Radially split	Single casing	BB4
				Double casing	BB5
	Vertically suspended	Single casing	Discharge through column	Diffuser	VS1
				Volute	VS2
				Axial flow	VS3
			Separate discharge	Line shaft	VS4
				Cantilever	VS5
		Double casing	Diffuser		VS6
			Volute		VS7

NOTE Illustrations of the various types of pump are provided in 4.2.

Copyright American Petroleum Institute
Reproduced by IHS under license with API
Document provided by IHS Licensee=TECNA/5935100001, 11/02/2004 06:04:35 MST
Questions or comments about this message: please call the Document Policy Group

4.2 Pump designations

4.2.1 Pump type OH1

Foot-mounted single-stage overhung pumps shall be designated pump type OH1. (This type does not meet all the requirements of this International Standard, see Table 2.)

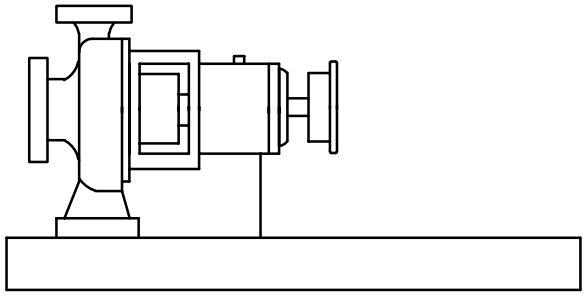

Figure 1 — Pump type OH1

4.2.2 Pump type OH2

Centreline-mounted single-stage overhung pumps shall be designated pump type OH2. They have a single bearing housing to absorb all forces imposed upon the pump shaft and maintain rotor position during operation. The pumps are mounted on a baseplate and are flexibly coupled to their drivers.

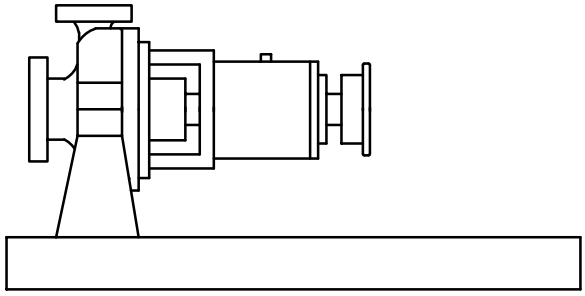

Figure 2 — Pump type OH2

4.2.3 Pump type OH3

Vertical in-line single-stage overhung pumps with separate bearing brackets shall be designated pump type OH3. They have a bearing housing integral with the pump to absorb all pump loads. The driver is mounted on a support integral to the pump. The pumps and their drivers are flexibly coupled.

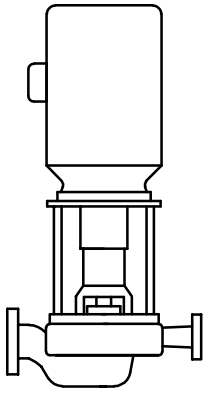

Figure 3 — Pump type OH3

--`,`,`,`,```,,,`,,,`,,,,,`,,,-`-`,,`,,`,`,,`---

Copyright American Petroleum Institute
Reproduced by IHS under license with API
Document provided by IHS Licensee=TECNA/5935100001, 11/02/2004 06:04:35 MST
Questions or comments about this message: please call the Document Policy Group

4.2.4 Pump type OH4

Rigidly coupled vertical in-line single-stage overhung pumps shall be designated pump type OH4. Rigidly coupled pumps have their shaft rigidly coupled to the driver shaft. (This type does not meet all the requirements of this International Standard, see Table 2.)

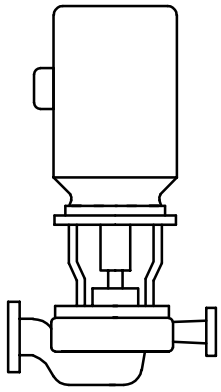

Figure 4 — Pump type OH4

4.2.5 Pump type OH5

Close-coupled vertical in-line single-stage overhung pumps shall be designated pump type OH5. Close-coupled pumps have their impellers mounted directly on the driver shaft. (This type does not meet all the requirements of this International Standard, see Table 2.)

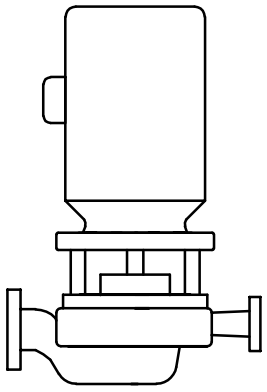

Figure 5 — Pump type OH5

4.2.6 Pump type OH6

High-speed integral gear-driven single-stage overhung pumps shall be designated pump type OH6. These pumps have a speed increasing gearbox integral with the pump. The impeller is mounted directly to the gearbox output shaft. There is no coupling between the gearbox and pump; however, the gearbox is flexibly coupled to its driver. The pumps may be oriented vertically or horizontally.

Copyright American Petroleum Institute
Reproduced by IHS under license with API
Document provided by IHS Licensee=TECNA/5935100001, 11/02/2004 06:04:35 MST
Questions or comments about this message: please call the Document Policy Group

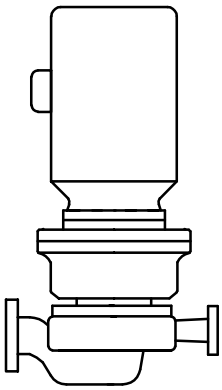

Figure 6 — Pump type OH6

4.2.7 Pump type BB1

Axially split one- and two-stage between-bearings pumps shall be designated pump type BB1.

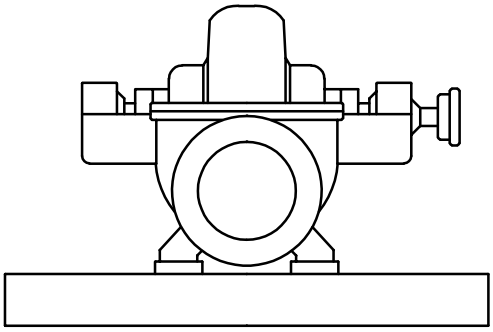

Figure 7 — Pump type BB1

4.2.8 Pump type BB2

Radially split one- and two-stage between-bearings pumps shall be designated pump type BB2.

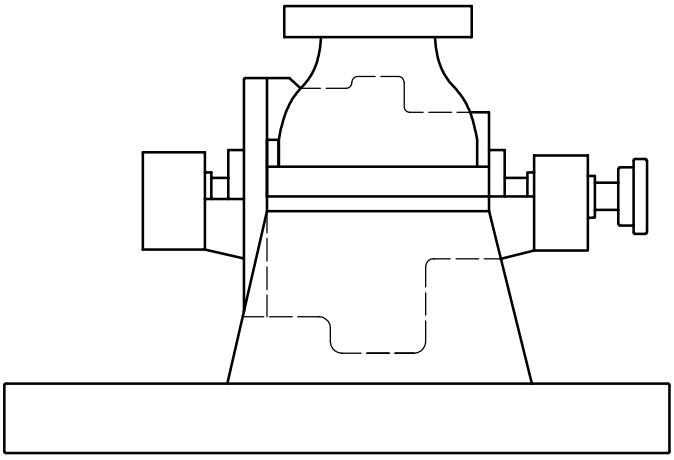

Figure 8 — Pump type BB2

Copyright American Petroleum Institute
Reproduced by IHS under license with API
Document provided by IHS Licensee=TECNA/5935100001, 11/02/2004 06:04:35 MST
Questions or comments about this message: please call the Document Policy Group

4.2.9 Pump type BB3

Axially split multistage between-bearings pumps shall be designated pump type BB3.

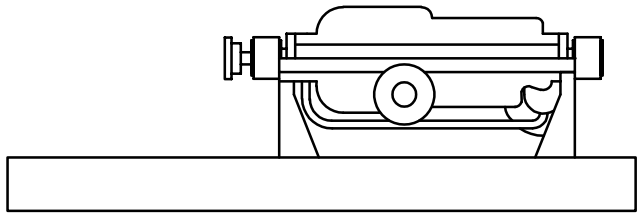

Figure 9 — Pump type BB3

4.2.10 Pump type BB4

Single-casing radially split multistage between-bearings pumps shall be designated pump type BB4. These pumps are also called ring-section pumps, segmental-ring pumps or tie-rod pumps. These pumps have a potential leakage path between each segment. (This type does not meet all the requirements of this International Standard, see Table 2.)

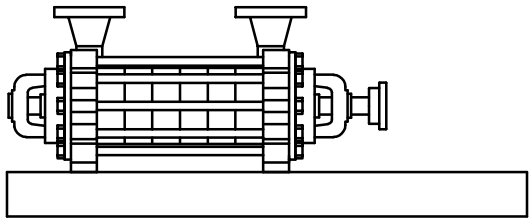

Figure 10 — Pump type BB4

4.2.11 Pump type BB5

Double-casing radially split multistage between-bearings pumps (barrel pumps) shall be designated pump type BB5.

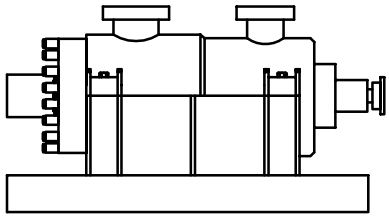

Figure 11 — Pump type BB5

4.2.12 Pump type VS1

Wet pit, vertically suspended, single-casing diffuser pumps with discharge through the column shall be designated pump type VS1.

Copyright American Petroleum Institute
Reproduced by IHS under license with API
Document provided by IHS Licensee=TECNA/5935100001, 11/02/2004 06:04:35 MST
Questions or comments about this message: please call the Document Policy Group

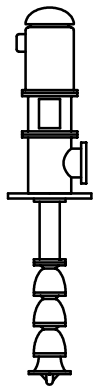

Figure 12 — Pump type VS1

4.2.13 Pump type VS2

Wet pit, vertically suspended single-casing volute pumps with discharge through the column shall be designated pump type VS2.

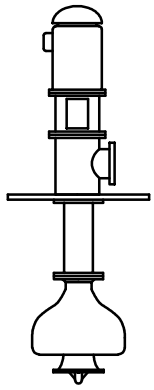

Figure 13 — Pump type VS2

4.2.14 Pump type VS3

Wet pit, vertically suspended, single-casing axial-flow pumps with discharge through the column shall be designated pump type VS3.

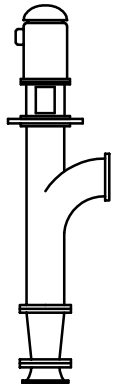

Figure 14 — Pump type VS3

Copyright American Petroleum Institute
Reproduced by IHS under license with API
Document provided by IHS Licensee=TECNA/5935100001, 11/02/2004 06:04:35 MST
Questions or comments about this message: please call the Document Policy Group

4.2.15 Pump type VS4

Vertically suspended, single-casing volute line-shaft driven sump pumps shall be designated pump type VS4.

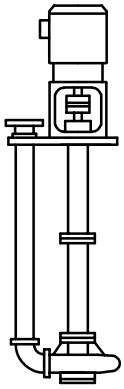

Figure 15 — Pump type VS4

4.2.16 Pump type VS5

Vertically suspended cantilever sump pumps shall be designated pump type VS5.

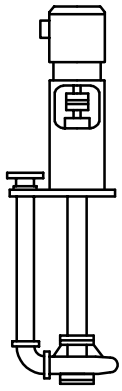

Figure 16 — Pump type VS5

4.2.17 Pump type VS6

Double-casing diffuser vertically suspended pumps shall be designated pump type VS6.

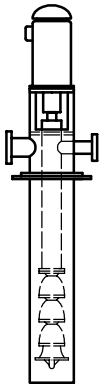

Figure 17 — Pump type VS6

Copyright American Petroleum Institute
Reproduced by IHS under license with API
Document provided by IHS Licensee=TECNA/5935100001, 11/02/2004 06:04:35 MST
Questions or comments about this message: please call the Document Policy Group

4.2.18 Pump type VS7

Double-casing volute vertically suspended pumps shall be designated pump type VS7.

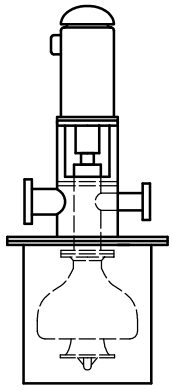

Figure 18 — Pump type VS7

4.3 Units and governing requirements

● **4.3.1** The purchaser shall specify whether drawings and maintenance dimensions of pumps shall be in SI units or US Customary (USC) units. Use of an ISO Standard datasheet (see Annex N, Figure N.1) indicates SI units shall be used. Use of a USC datasheet (see Annex N, Figure N.2) indicates that US Customary units shall be used.

4.3.2 Where requirements specific to a particular pump type in Clause 8 conflict with any other clauses, the requirements of Clause 8 shall govern.

5 Basic design

5.1 General

5.1.1 The equipment (including auxiliaries) covered by this International Standard shall be designed and constructed for a minimum service life of 20 years (excluding normal-wear parts as identified in Table 18) and at least 3 years of uninterrupted operation. It is recognized that these requirements are design criteria and that service or duty severity, misoperation or improper maintenance can result in a machine failing to meet these criteria.

The term “design” shall apply solely to parameters or features of the equipment supplied by the manufacturer. The term “design” should not be used in the purchasers enquiry or specifications because it can create confusion in understanding the order.

5.1.2 The vendor shall assume unit responsibility for all equipment and all auxiliary systems included in the scope of the order.

● **5.1.3** The purchaser shall specify the operating conditions, the liquid properties, site conditions and utility conditions, including all data shown on the process data sheet (Annex N). The purchaser shall specify if the pump is intended for use as an HPRT and if Annex C shall apply.

5.1.4 The equipment shall be capable of operation at the normal and rated operating points and any other anticipated operating conditions specified by the purchaser.

● **5.1.5** Fluids that are flammable or hazardous shall be identified by the purchaser.

Copyright American Petroleum Institute
Reproduced by IHS under license with API
Document provided by IHS Licensee=TECNA/5935100001, 11/02/2004 06:04:35 MST
Questions or comments about this message: please call the Document Policy Group

5.1.6 Pumps shall be capable of at least a 5 % head increase at rated conditions by replacement of the impeller(s) with one(s) of larger diameter or different hydraulic design, variable-speed capability or use of a blank stage.

This requirement is intended to prevent a change in selection caused by refinement of hydraulic requirements after the pump has been purchased. It is not intended to accommodate future expandability. If there is a future operating requirement, it should be specified separately and considered in selection.

5.1.7 Pumps shall be capable of operating at least up to the maximum continuous speed. The maximum continuous speed shall be

a) equal to the speed corresponding to the synchronous speed at maximum supply frequency for electrical motors,

b) at least 105 % of rated speed for variable-speed pumps, and any fixed-speed pump sparing or spared by a pump whose driver is capable of exceeding rated speed.

5.1.8 Variable-speed pumps shall be designed for excursions to trip speed without damage.

5.1.9 The conditions in the seal chamber required to maintain a stable film at the seal faces, including temperature, pressure and flow, as well as provisions for assuring the adequacy of the design for sealing against atmospheric pressure when pumps are idle in vacuum service, shall be agreed upon by the pump vendor and the seal manufacturer, approved by the purchaser, and noted on the data sheet.

NOTE Provision for sealing against atmospheric pressure in vacuum service is especially important when handling liquids near their vapour pressure (such as liquefied petroleum gases).

5.1.10 The vendor shall specify on the data sheets the NPSHR based on water [at a temperature of less than 65 °C (150 °F)] at the rated flow and rated speed. A reduction or correction factor for liquids other than water (such as hydrocarbons) shall not be applied.

The purchaser should consider an appropriate NPSH margin in addition to the NPSHR specified. An NPSH margin is the NPSH that exists in excess of the pump's NPSHR. It is usually desirable to have an operating NPSH margin that is sufficient at all flows (from minimum continuous stable flow to maximum expected operating flow) to protect the pump from damage caused by flow recirculation, separation and cavitation. The vendor should be consulted about recommended NPSH margins for the specific pump type and intended service.

In establishing NPSHA, the purchaser and the vendor should recognize the relationship between minimum continuous stable flow and the pump's suction-specific speed. In general, minimum continuous stable flow, expressed as a percentage of flow at the pump's best efficiency point, increases as suction-specific speed increases. However, other factors, such as the pump's energy level and hydraulic design, the pumped liquid and the NPSH margin, also affect the pump's ability to operate satisfactorily over a wide flow range. Pump design that addresses low-flow operation is an evolving technology, and selection of suction-specific speed levels and NPSH margins should take into account current industry and vendor experience.

Unless otherwise specified, the datum elevation shall be the shaft centreline for horizontal pumps, the suction-nozzle centreline for vertical in-line pumps, and the top of the foundation for vertically suspended pumps.

● **5.1.11** The pump suction-specific speed shall be calculated in accordance with Annex A and, if specified, limited as stated on the data sheet.

5.1.12 Pumps that handle liquids more viscous than water shall have their water performance corrected in accordance with HI 1.3 (see Clause 2). Correction factors shall be submitted with proposal and test curves.

● **5.1.13** Pumps that have stable head/flowrate curves (continuous head rise to shutoff) are preferred for all applications and are required if parallel operation is specified. If parallel operation is specified, the head rise from rated point to shutoff shall be at least 10 %. If a discharge orifice is used as a means of providing a continuous rise to shutoff, this use shall be stated in the proposal.

Copyright American Petroleum Institute
Reproduced by IHS under license with API
Document provided by IHS Licensee=TECNA/5935100001, 11/02/2004 06:04:35 MST
Questions or comments about this message: please call the Document Policy Group

5.1.14 Pumps shall have a preferred operating region of 70 % to 120 % of best efficiency flowrate of the pump as furnished. Rated flow shall be within the region of 80 % to 110 % of best efficiency flowrate of the pump as furnished.

Setting limits for the preferred operating region and the location of rated flow is not intended to lead to the development of additional sizes of small pumps or preclude the use of high specific-speed pumps. Small pumps, which are known to operate satisfactorily at flows outside the specified limits, and high specific-speed pumps, which may have a narrower preferred operating region than specified, should be offered where appropriate, and their preferred operating region clearly shown on the proposal curve. The pump specific speed shall be calculated in accordance with Annex A.

5.1.15 The best efficiency point for the pump as furnished should preferably be between the rated point and the normal point.

● **5.1.16** If specified, the vendor shall provide both maximum sound pressure and sound power level data per octave band for the equipment. Control of the sound pressure level (SPL) of all equipment furnished shall be a joint effort of the purchaser and the vendor who has unit responsibility. The equipment furnished by the vendor shall conform to the maximum allowable sound pressure level specified. ISO 3740 [7], ISO 3744 [8] and ISO 3746 [9] may be consulted for guidance.

5.1.17 Pumps with heads greater than 200 m (650 ft) per stage and with more than 225 kW (300 hp) per stage may require special provisions to reduce vane passing-frequency vibration and low-frequency vibration at reduced flowrates. For these pumps, the radial clearance between the diffuser vane or volute tongue (cutwater) and the periphery of the impeller blade shall be at least 3 % of the maximum impeller blade-tip radius for diffuser designs and at least 6 % of the maximum blade-tip radius for volute designs. The maximum impeller blade-tip radius is the radius of the largest impeller that can be used within the pump casing (see 5.1.6). Percent clearance is calculated as follows:

$$P = 100\left(R_2 - R_1\right)/R_1$$

where

P is the percent clearance;

R_2 is the radius of volute or diffuser inlet tip;

R_1 is the maximum impeller blade tip radius.

The impellers of pumps covered by this clause shall not be modified after test to correct hydraulic performance by underfiling, overfiling or “V”-cutting without notifying the purchaser prior to shipment. Any such modifications shall be documented in accordance with 9.3.4.1.

5.1.18 Pumps operating above 3600 r/min and absorbing more than 300 kW (400 hp) per stage may require even larger clearances and other special construction features. For these pumps, specific requirements should be agreed upon by the purchaser and the vendor, considering actual operating experience with the specific pump types.

● **5.1.19** The need for cooling shall be agreed upon by the purchaser and the vendor. One of the plans in Annex B shall be selected. The cooling system shall be suitable for operation with the coolant type, pressure and temperature specified by the purchaser. The vendor shall specify the required flow. To avoid condensation, the minimum temperature at the cooling-water inlet to bearing housings should be above the ambient air temperature.

5.1.20 Jackets, if provided, shall have clean-out connections arranged so that the entire passageway can be mechanically cleaned, flushed and drained.

5.1.21 Jacket systems, if provided, shall be designed to prevent the process stream from leaking into the jacket. Jacket passages shall not open into casing joints.

Copyright American Petroleum Institute
Reproduced by IHS under license with API
Document provided by IHS Licensee=TECNA/5935100001, 11/02/2004 06:04:35 MST
Questions or comments about this message: please call the Document Policy Group

5.1.22 Water-cooling systems shall be designed for the following conditions on the water side:

	SI units	**US Customary units**
Velocity over heat exchange surfaces:	1,5 m/s to 2,5 m/s	(5 ft/s to 8 ft/s)
Maximum allowable working pressure (MAWP), gauge:	700 kPa	(7 bar) (100 psi)
Test pressure (>1,5 MAWP), gauge:	1 050 kPa	(10,5 bar) (150 psi)
Maximum pressure drop:	100 kPa	(1 bar) (15 psi)
Maximum inlet temperature:	30 °C	(90 °F)
Maximum outlet temperature:	50 °C	(120 °F)
Maximum temperature rise:	20 K	(30 °R)
Fouling factor on water side:	0,35 $m^2 \cdot K/kW$	(0,002 h-ft^2-°R/Btu)
Shell corrosion allowance (not for tubes):	3,0 mm	(0,125 in)

Provisions shall be made for complete venting and draining of the system.

The criterion for velocity over heat-exchange surfaces is intended to minimize waterside fouling.

5.1.23 The arrangement of the equipment, including piping and auxiliaries, shall be developed jointly by the purchaser and the vendor. The arrangement shall provide adequate clearance areas and safe access for operation and maintenance.

● **5.1.24** Motors, electrical components and electrical installations shall be suitable for the area classification (class, group, and division or zone) specified by the purchaser and shall meet the requirements of the applicable sections of IEC 60079 or NFPA 70, Articles 500, 501, 502, 504 and 505 as well as any local codes specified and furnished on request by the purchaser.

5.1.25 Oil reservoirs and housings that enclose moving lubricated parts, such as bearings, shaft seals, highly polished parts, instruments and control elements, shall be designed to minimize contamination by moisture, dust and other foreign matter during periods of operation and idleness.

5.1.26 All equipment shall be designed to permit rapid and economical maintenance. Major parts such as casing components and bearing housings shall be designed and manufactured to ensure accurate alignment on reassembly. This may be accomplished by the use of shouldering, dowels or keys.

5.1.27 Except for vertically suspended pumps and integrally geared pumps, pumps shall be designed to permit removal of the rotor or inner element without disconnecting the suction or discharge piping or moving the driver.

5.1.28 The pump and its driver shall perform on their test stands and on their permanent foundation within the acceptance criteria specified in 5.9.3. After installation, the performance of the combined units shall be the joint responsibility of the purchaser and the vendor who has unit responsibility.

5.1.29 Spare and all replacement parts for the pump and all furnished auxiliaries shall, as a minimum, meet all the criteria of this International Standard.

5.1.30 Equipment, including all auxiliaries, shall be designed for outdoor installation and the specified site environmental conditions. The vendor shall advise any equipment protection required for the jobsite location (i.e. winterization for low ambient temperatures, or protection against unusual humidity, dusty or corrosive conditions, etc.).

5.1.31 Bolting for pressure casings shall conform to the following criteria.

a) The details of threading shall conform to ISO 261, ISO 262, ISO 724 and ISO 965, or to ASME B1.1.

b) Adequate clearance shall be provided at all bolting locations to permit the use of socket or box spanners (wrenches).

Copyright American Petroleum Institute
Reproduced by IHS under license with API
Document provided by IHS Licensee=TECNA/5935100001, 11/02/2004 06:04:35 MST
Questions or comments about this message: please call the Document Policy Group

c) External hexagon-head bolting is required unless otherwise agreed.

d) Fasteners shall be not less than 12 mm (0,5 in) diameter.

e) Fasteners (excluding washers and headless set-screws) shall have the material grade and manufacturers identification symbols applied to one end of studs 10 mm (3/8 in) in diameter and larger and to the heads of bolts 6 mm (1/4 in) in diameter and larger. If the available area is inadequate, the grade symbol may be marked on one end and the manufacturer's identification symbol marked on the other end. Studs shall be marked on the exposed end.

NOTE A set-screw is a headless screw with a hexagonal socket in one end.

f) Metric fine and UNF threads shall not be used.

5.2 Pump types

The pump types listed in Table 2 have special design features and shall be furnished only if specified by the purchaser and if the manufacturer has proven experience for the specific application. Table 2 lists the features requiring special consideration for these pump types, and gives in parentheses the relevant subclause(s) of this International Standard.

Table 2 — Special design features of particular pump types

Pump type	Features requiring special consideration
Close-coupled (impeller mounted on motor shaft), OH5	a) Motor construction (6.1) b) Motor bearing and winding temperature at high pumping temperatures c) Seal removal (5.8.2)
Rigidly coupled vertical in-line, OH4	a) Motor construction (6.1) b) Rotor stiffness (5.6.9) c) Product-lubricated guide bearing (5.10.1.1) d) Shaft runout at seal (5.6.8, 5.8.5)
Horizontal foot-mounted overhung, OH1	a) Pressure rating (5.3.5) b) Casing support (5.3.11)
Two-stage overhung	a) Rotor stiffness (5.6.9)
Double-suction overhung	a) Rotor stiffness (5.6.9)
Ring-section casing (multistage), BB4	a) Pressure containment (5.3.3, 5.3.10) b) Dismantling (5.1.27)
Built-in mechanical seal (no separable seal gland)	a) Seal removal (5.8.2)

Copyright American Petroleum Institute
Reproduced by IHS under license with API
Document provided by IHS Licensee=TECNA/5935100001, 11/02/2004 06:04:35 MST
Questions or comments about this message: please call the Document Policy Group

5.3 Pressure casings

5.3.1 The maximum discharge pressure shall be the maximum suction pressure plus the maximum differential pressure the pump is able to develop when operating with the furnished impeller at the rated speed and specified normal relative density (specific gravity).

NOTE The basis of determining maximum discharge pressure is an application issue.

- **5.3.2** If specified, the maximum discharge pressure shall be increased by the additional differential pressure developed during one or more of the following operating circumstances:

a) the maximum specified relative density at any specified operating condition;

b) installation of an impeller of the maximum diameter and/or number of stages that the pump can accommodate;

c) operation to trip speed.

The purchaser should assess the likelihood of the circumstances above occurring before specifying them.

The additional differential pressure developed at trip speed is normally a momentary excursion to be absorbed by the hydrotest margin.

5.3.3 The pressure casing shall be designed to:

a) operate without leakage or internal contact between rotating and stationary components while subject simultaneously to the MAWP (and corresponding temperature) and the worst-case combination of twice the allowable nozzle loads of Table 4 applied through each nozzle;

b) withstand the hydrostatic test (see 7.3.2).

NOTE The twice-nozzle-load requirement is a pressure-casing design criterion. Allowable nozzle loads for piping designers are the values given in Table 4. Other factors such as casing support or baseplate stiffness affect allowable nozzle loads.

5.3.4 The tensile stress used in the design of the pressure casing for any material shall not exceed 0,25 times the minimum ultimate tensile strength for that material at the maximum specified operating temperature and, for castings, multiplied by the appropriate casting factor as given in Table 3. The manufacturer shall state the source of the material properties, such as ASTM, as well as the casting factors applied in his proposal.

NOTE 1 In general, the criteria in 5.3.3 result in deflection (strain) being the determining consideration in the design of pump casings. Ultimate tensile or yield strength is seldom the limiting factor.

NOTE 2 For bolting, the allowable tensile stress is used to determine the total bolting area based on hydrostatic load or gasket preload. It is recognized that to provide the initial load required to obtain a reliable bolted joint, the bolting will be tightened to produce a tensile stress higher than the design tensile stress. Values in the range of 0,7 times yield are common.

Table 3 — Casting factors

Type of NDE	Casting factor
Visual, magnetic particle and/or liquid penetrant	0,8
Spot radiography	0,9
Ultrasonic	0,9
Full radiography	1,0

Copyright American Petroleum Institute
Reproduced by IHS under license with API
Document provided by IHS Licensee=TECNA/5935100001, 11/02/2004 06:04:35 MST
Questions or comments about this message: please call the Document Policy Group

5.3.5 Except as noted in 5.3.6, the MAWP shall be at least the maximum discharge pressure (see 5.3.1 and 5.3.2) plus 10 % of the maximum differential pressure, and shall not be less than:

a) for axially split one- and two-stage between-bearings pumps and single-casing vertically suspended pumps: a pressure rating equal to that of an ISO 7005-2 PN20 cast iron or ISO 7005-1 PN20 steel flange of a material grade corresponding to that of the pressure casing.

NOTE For the purpose of this provision, ASME B16.1 Class 125 and ASME B16.5 Class 150 are equivalent to ISO 7005-2 PN20 and ISO 7005-1 PN20, respectively.

b) for all other pumps: a minimum gauge pressure rating of 4 000 kPa (40 bar) (600 psi) at 38 °C (100 °F), or at least ISO 7005-1 PN50.

NOTE 1 The 10 % differential pressure margin is intended to accommodate head increases (5.1.6), higher speed in variable-speed pumps (5.1.7) and head (testing) tolerance (see 7.3.3.4).

NOTE 2 For the purposes of this provision, ASME B16.5 Class 300 flange is equivalent to ISO 7005-1 PN50.

NOTE 3 This subclause provides minimum requirements consistent with designs existing at the time of publication. For future designs, it is considered desirable that the case MAWP match the pressure capabilities of the adjacent flanges.

● **5.3.6** Unless otherwise specified, vertically suspended, double-casing, integral gear-driven (type OH6) and horizontal multistage pumps (pumps with three or more stages) may be designed for dual pressure ratings. If specified, suction regions shall be designed for the same MAWP as the discharge section.

The purchaser should consider installation of relief valves on the suction side of such installations.

5.3.7 The pressure casing shall be designed with a corrosion allowance to meet the requirements of 5.1.1. Unless otherwise specified, the minimum corrosion allowance shall be 3 mm (0,12 in).

The vendor is encouraged to propose alternative corrosion allowances for consideration if materials of construction with superior corrosion resistance are employed and if they result in lower cost without affecting safety and reliability.

5.3.8 The inner casing of double-casing pumps shall be designed to withstand the maximum differential gauge pressure or 350 kPa (3,5 bar) (50 psi), whichever is greater.

5.3.9 Unless otherwise specified, pumps with radially split casings are required for any of the following operating conditions:

a) a pumping temperature of 200 °C (400 °F) or higher (a lower temperature limit should be considered if thermal shock is probable);

b) a flammable or hazardous pumped liquid with a relative density of less than 0,7 at the specified pumping temperature;

c) a flammable or hazardous pumped liquid at a rated discharge pressure above 10 000 kPa (100 bar) (1 450 psi).

Axially split casings have been used successfully beyond the limits given above, generally for off-plot applications at higher pressure or lower relative density (specific gravity). The success of such applications depends on the margin between design pressure and rated pressure, the manufacturer's experience with similar applications, the design and manufacture of the split joint, and the user's ability to correctly remake the split joint in the field. The purchaser should take these factors into account before specifying an axially split casing for conditions beyond the above limits.

5.3.10 Radially split casings shall have metal-to-metal fits, with confined controlled-compression gaskets, such as an O-ring or a spiral wound type.

Copyright American Petroleum Institute
Reproduced by IHS under license with API
Document provided by IHS Licensee=TECNA/5935100001, 11/02/2004 06:04:35 MST
Questions or comments about this message: please call the Document Policy Group

5.3.11 Centreline-supported pump casings shall be used for all horizontal pumps except as allowed in 8.2.1.2.

5.3.12 O-ring sealing surfaces, including all grooves and bores, shall have a maximum surface roughness average value (Ra) of 1,6 µm (63 micro-inches) for static O-rings and 0,8 µm (32 micro-inches) for the surface against which dynamic O-rings slide. Bores shall have a minimum 3 mm (0,12 in) radius or a minimum 1,5 mm (0,06 in) chamfered lead-in for static O-rings and a minimum 2 mm (0,08 in) chamfered lead-in for dynamic O-rings. Chamfers shall have a maximum angle of 30°.

5.3.13 Jackscrews shall be provided to facilitate disassembly of the casing. One of the contacting faces shall be relieved (counterbored or recessed) to prevent a leaking joint or an improper fit caused by marring of the face.

5.3.14 The use of threaded holes in pressure parts shall be minimized. To prevent leakage in pressure sections of casings, metal, equal in thickness to at least half the nominal bolt or stud diameter, plus the allowance for corrosion, shall be left around and below the bottom of drilled and threaded holes.

Internal bolting shall be of a material fully resistant to corrosive attack by the pumped liquid.

Studs shall be supplied on all main casing joints unless cap screws are specifically approved by the purchaser.

5.4 Nozzles and pressure casing connections

5.4.1 Casing opening sizes

5.4.1.1 Openings for nozzles and other pressure casing connections shall be standard pipe sizes. Openings of DN 32, 65, 90, 125, 175 and 225 (NPS 1 1/4, 2 1/2, 3 1/2, 5, 7 and 9) shall not be used.

5.4.1.2 Casing connections other than suction and discharge nozzles shall be at least DN 15 (NPS 1/2) for pumps with discharge nozzle openings DN 50 (NPS 2) and smaller. Connections shall be at least DN 20 (NPS 3/4) for pumps with discharge nozzle openings DN 80 (NPS 3) and larger, except that connections for seal flush piping and gauges may be DN 15 (NPS 1/2) regardless of pump size.

5.4.2 Suction and discharge nozzles

5.4.2.1 Suction and discharge nozzles shall be flanged, except those on pumps with forged casings, which shall be flanged or machined and studded. One- and two-stage pumps shall have suction and discharge flanges of equal rating.

5.4.2.2 Cast iron flanges shall be flat-faced and, except as noted in 5.4.2.4, conform to the dimensional requirements of ISO 7005-2 and the flange finish requirements of ASME B16.1 or ASME B16.42. PN 20 (Class 125) flanges shall have a minimum thickness equal to that of PN 40 (Class 250) flanges for sizes DN 200 (NPS 8) and smaller.

5.4.2.3 Flanges other than cast iron shall, as a minimum requirement, conform to the dimensional requirements of ISO 7005-1 PN 50 except as noted in 5.4.2.4 and the flange finish requirements of ASME B16.5 or ASME B16.47.

NOTE For the purpose of this provision, ASME B16.5 Class 300 and ASME B16.47 Class 300 are equivalent to ISO 7005-1 PN 50.

5.4.2.4 Flanges in all materials that are thicker or have a larger outside diameter than required by the relevant ISO (ASME) standards in this International Standard are acceptable. Non-standard (oversized) flanges shall be completely dimensioned on the arrangement drawing. If oversized flanges require studs or bolts of non-standard length, this requirement shall be identified on the arrangement drawing.

5.4.2.5 Flanges shall be full faced or spot faced on the back and shall be designed for through bolting, except for jacketed casings.

Copyright American Petroleum Institute
Reproduced by IHS under license with API
Document provided by IHS Licensee=TECNA/5935100001, 11/02/2004 06:04:35 MST
Questions or comments about this message: please call the Document Policy Group

5.4.3 Auxiliary connections

5.4.3.1 For non-flammable non-hazardous liquids, auxiliary connections to the pressure casing may be threaded.

5.4.3.2 Unless otherwise specified, pipe threads shall be tapered threads conforming to ISO 7-1. Openings and bosses for pipe threads shall conform to ASME B16.5.

NOTE For the purpose of this provision, ASME B1.20.1 is equivalent to ISO 7-1.

● **5.4.3.3** If specified, cylindrical threads conforming to ISO 228-1 shall be used. If cylindrical threads are used, they shall be sealed with a contained face gasket, and the connection boss shall have a machined face suitable for gasket containment (see Figure 19).

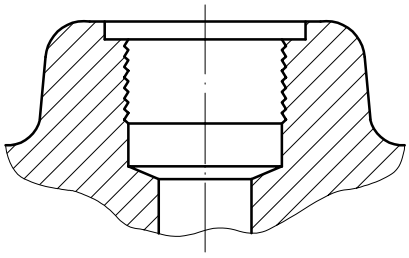

Figure 19 — Machined face suitable for gasket containment if using cylindrical threads

5.4.3.4 For flammable or hazardous liquids, auxiliary connections to the pressure casing, except seal gland, shall be socket-welded, butt-welded or integrally flanged. Purchaser interface connections shall terminate in a flange.

5.4.3.5 Connections welded to the casing shall meet or exceed the material requirements of the casing, including impact values, rather than the requirements of the connected piping. All connection welding shall be completed before the casing is hydrostatically tested (see 7.3.2).

5.4.3.6 Pipe nipples screwed or welded to the casing should not be more than 150 mm (6 in) long and shall be a minimum of Schedule 160 seamless for sizes DN 25 (NPS 1) and smaller and a minimum of Schedule 80 for DN 40 (NPS 1 1/2)

5.4.3.7 Threaded openings not connected to piping are only allowed in seal glands and in pumps of material classes I-1 and I-2 (see Annex H). If supplied, they shall be plugged. Taper-threaded plugs shall be long-shank, solid round-head, or long-shank hexagon-head, bar stock plugs in accordance with ASME B16.11. If cylindrical threads are specified in 5.4.3.3, plugs shall be solid hexagon-head plugs in accordance with DIN 910. These plugs shall meet the material requirements of the casing. A lubricant/sealant that is suitable for high temperature duty shall be used to ensure that the threads are vapour-tight. Plastic plugs are not permitted.

● **5.4.3.8** At interfaces with the purchaser's equipment, the use of machined and studded connections requires the approval of the purchaser. If approved, they shall conform to the facing and drilling requirements of ISO 7005-1 or ISO 7005-2. Studs and nuts shall be furnished installed. The first 1,5 threads at both ends of each stud shall be removed.

NOTE For the purpose of this provision, ASME B16.1 and ASME B16.5 are equivalent to ISO 7005-1 and ISO 7005-2, respectively.

5.4.3.9 All connections shall be suitable for the hydrostatic test pressure of the region of the casing to which they are attached.

5.4.3.10 All pumps shall be provided with vent and drain connections, except that vent connections may be omitted if the pump is made self-venting by the arrangement of the nozzles.

Copyright American Petroleum Institute
Reproduced by IHS under license with API
Document provided by IHS Licensee=TECNA/5935100001, 11/02/2004 06:04:35 MST
Questions or comments about this message: please call the Document Policy Group

As a guide, a pump is considered self-venting if the nozzle arrangement and the casing configuration permit sufficient venting of gases from the first-stage impeller and volute area to prevent loss of prime during the starting sequence.

5.4.3.11 All of the purchaser's connections shall be accessible for disassembly without requiring the pump, or any major part of the pump, to be moved.

5.5 External nozzle forces and moments

5.5.1 Steel and alloy steel horizontal pumps and their baseplates and vertically suspended pumps shall be designed for satisfactory performance if subjected to the forces and moments in Table 4. For horizontal pumps, two effects of nozzle loads are considered: Distortion of the pump casing (see 5.3.3 and 5.3.4) and misalignment of the pump and driver shafts (see 6.3.5).

5.5.2 Allowable forces and moments for vertical in-line pumps shall be twice the values in Table 4 for side nozzles.

5.5.3 For pump casings constructed of materials other than steel or alloy steel or for pumps with nozzles larger than DN 400 (NPS 16), the vendor shall submit allowable nozzle loads corresponding to the format in Table 4.

Table 4 — Nozzle loadings

	SI units								
	Nominal size of flange (DN)								
	⩽ 50	**80**	**100**	**150**	**200**	**250**	**300**	**350**	**400**
	Forces (N)								
Each top nozzle									
F_X	710	1 070	1 420	2 490	3 780	5 340	6 670	7 120	8 450
F_Y	580	890	1 160	2 050	3 110	4 450	5 340	5 780	6 670
F_Z	890	1 330	1 780	3 110	4 890	6 670	8 000	8 900	10 230
F_R	1 280	1 930	2 560	4 480	6 920	9 630	11 700	12 780	14 850
Each side nozzle									
F_X	710	1 070	1 420	2 490	3 780	5 340	6 670	7 120	8 450
F_Y	890	1 330	1 780	3 110	4 890	6 670	8 000	8 900	10 230
F_Z	580	890	1 160	2 050	3 110	4 450	5 340	5 780	6 670
F_R	1 280	1 930	2 560	4 480	6 920	9 630	11 700	12 780	14 850
Each end nozzle									
F_X	890	1 330	1 780	3 110	4 890	6 670	8 000	8 900	10 230
F_Y	710	1 070	1 420	2 490	3 780	5 340	6 670	7 120	8 450
F_Z	580	890	1 160	2 050	3 110	4 450	5 340	5 780	6 670
F_R	1 280	1 930	2 560	4 480	6 920	9 630	11 700	12 780	14 850
	Moments (N·m)								
Each nozzle									
M_X	460	950	1 330	2 300	3 530	5 020	6 100	6 370	7 320
M_Y	230	470	680	1 180	1 760	2 440	2 980	3 120	3 660
M_Z	350	720	1 000	1 760	2 580	3 800	4 610	4 750	5 420
M_R	620	1 280	1 800	3 130	4 710	6 750	8 210	8 540	9 820

Copyright American Petroleum Institute
Reproduced by IHS under license with API
Document provided by IHS Licensee=TECNA/5935100001, 11/02/2004 06:04:35 MST
Questions or comments about this message: please call the Document Policy Group

Table 4 — Nozzle loadings (*continued*)

	US Customary units								
	Nominal size of flange (NPS)								
	⩽ 2	3	4	6	8	10	12	14	16
	Forces (lbf)								
Each top nozzle									
F_X	160	240	320	560	850	1 200	1 500	1 600	1 900
F_Y	130	200	260	460	700	1 000	1 200	1 300	1 500
F_Z	200	300	400	700	1 100	1 500	1 800	2 000	2 300
F_R	290	430	570	1 010	1 560	2 200	2 600	2 900	3 300
Each side nozzle									
F_X	160	240	320	560	850	1 200	1 500	1 600	1 900
F_Y	200	300	400	700	1 100	1 500	1 800	2 000	2 300
F_Z	130	200	260	460	700	1 000	1 200	1 300	1 500
F_R	290	430	570	1 010	1 560	2 200	2 600	2 900	3 300
Each end nozzle									
F_X	200	300	400	700	1 100	1 500	1 800	2 000	2 300
F_Y	160	240	320	560	850	1 200	1 500	1 600	1 900
F_Z	130	200	260	460	700	1 000	1 200	1 300	1 500
F_R	290	430	570	1 010	1 560	2 200	2 600	2 900	3 300
	Moments (ft·lbf)								
Each nozzle									
M_X	340	700	980	1 700	2 600	3 700	4 500	4 700	5 400
M_Y	170	350	500	870	1 300	1 800	2 200	2 300	2 700
M_Z	260	530	740	1 300	1 900	2 800	3 400	3 500	4 000
M_R	460	950	1 330	2 310	3 500	5 000	6 100	6 300	7 200

NOTE 1 See Figures 20 through 24 for orientation of nozzle loads (X, Y and Z).

NOTE 2 Each value shown above indicates range from minus that value to plus that value; for example 160 indicates a range from –160 to +160.

5.5.4 The coordinate system(s) shown in Figures 20 through 24 shall be used to apply the forces and moments in Table 4.

● **5.5.5** Annex F gives methods of qualifying nozzle loads in excess of those in Table 4. These methods may be used if approved by the purchaser, and the purchaser should then direct the piping designer accordingly. The purchaser should be aware that the use of Annex F methods can result in up to 50 % greater misalignment than would occur using the loads of Table 4.

Copyright American Petroleum Institute
Reproduced by IHS under license with API
Document provided by IHS Licensee=TECNA/5935100001, 11/02/2004 06:04:35 MST
Questions or comments about this message: please call the Document Policy Group

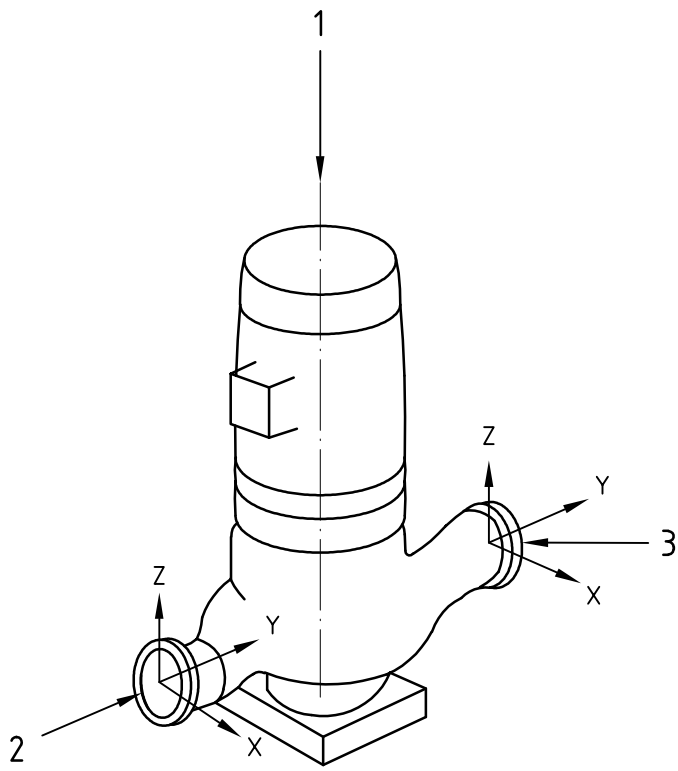

Key

1 shaft centreline

2 discharge

3 suction

Figure 20 — Coordinate system for the forces and moments in Table 4 — Vertical in-line pumps

Copyright American Petroleum Institute
Reproduced by IHS under license with API
Document provided by IHS Licensee=TECNA/5935100001, 11/02/2004 06:04:35 MST
Questions or comments about this message: please call the Document Policy Group

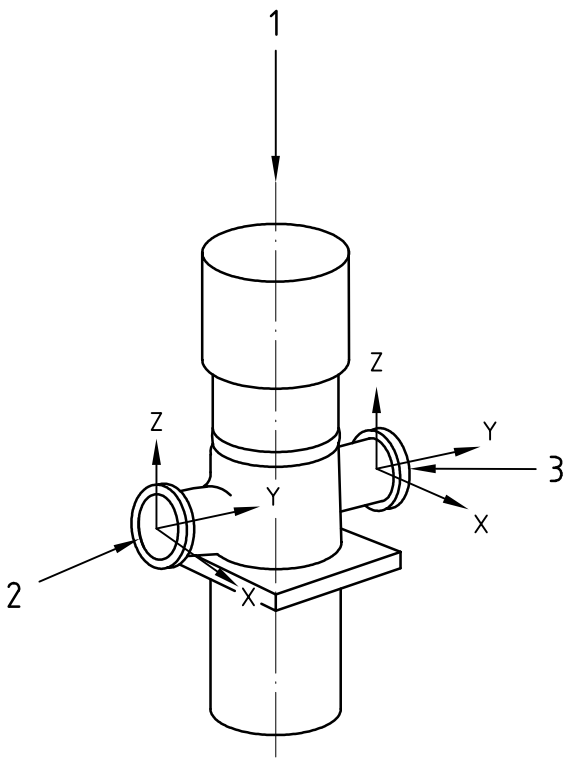

Key

1 shaft centreline

2 discharge

3 suction

Figure 21 — Coordinate system for the forces and moments in Table 4 — Vertically suspended double-casing pumps

Copyright American Petroleum Institute
Reproduced by IHS under license with API
Document provided by IHS Licensee=TECNA/5935100001, 11/02/2004 06:04:35 MST
Questions or comments about this message: please call the Document Policy Group

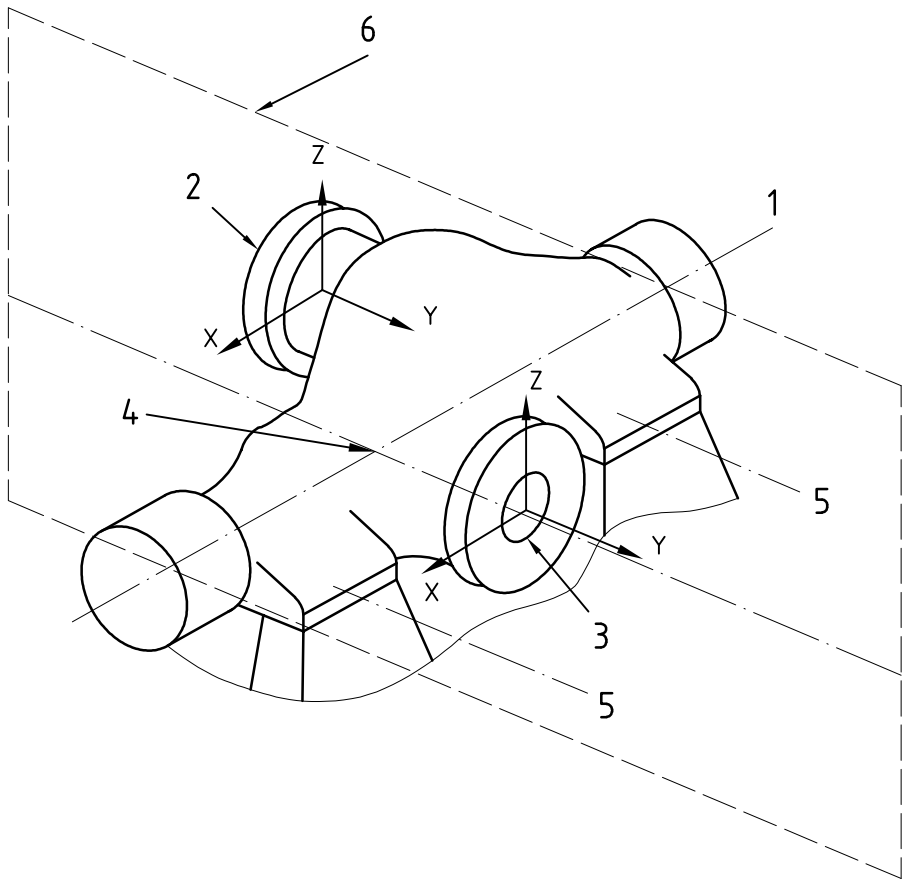

Key

1 shaft centreline
2 discharge nozzle
3 suction nozzle
4 centre of pump
5 pedestal centreline
6 vertical plane

Figure 22 — Coordinate system for the forces and moments in Table 4 — Horizontal pumps with side suction and side discharge nozzles

Copyright American Petroleum Institute
Reproduced by IHS under license with API
Document provided by IHS Licensee=TECNA/5935100001, 11/02/2004 06:04:35 MST
Questions or comments about this message: please call the Document Policy Group

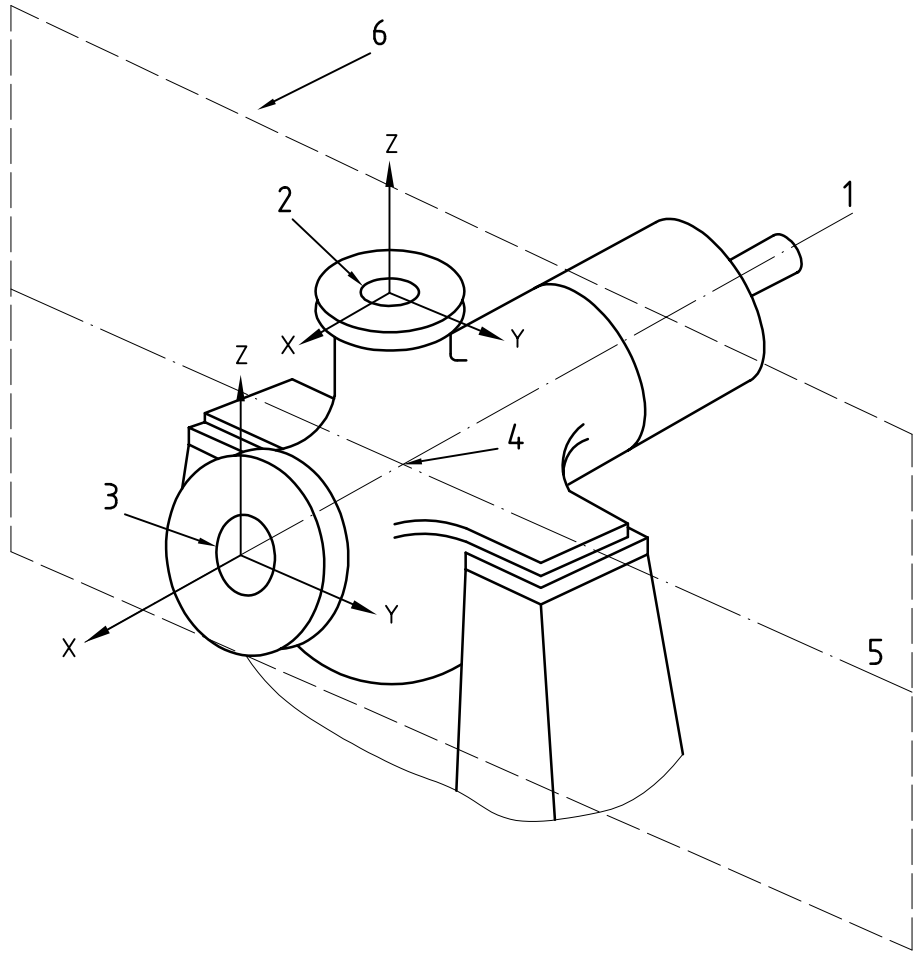

Key

1 shaft centreline
2 discharge nozzle
3 suction nozzle
4 centre of pump
5 pedestal centreline
6 vertical plane

Figure 23 — Coordinate system for the forces and moments in Table 4 — Horizontal pumps with end suction and top discharge nozzles

Copyright American Petroleum Institute
Reproduced by IHS under license with API
Document provided by IHS Licensee=TECNA/5935100001, 11/02/2004 06:04:35 MST
Questions or comments about this message: please call the Document Policy Group

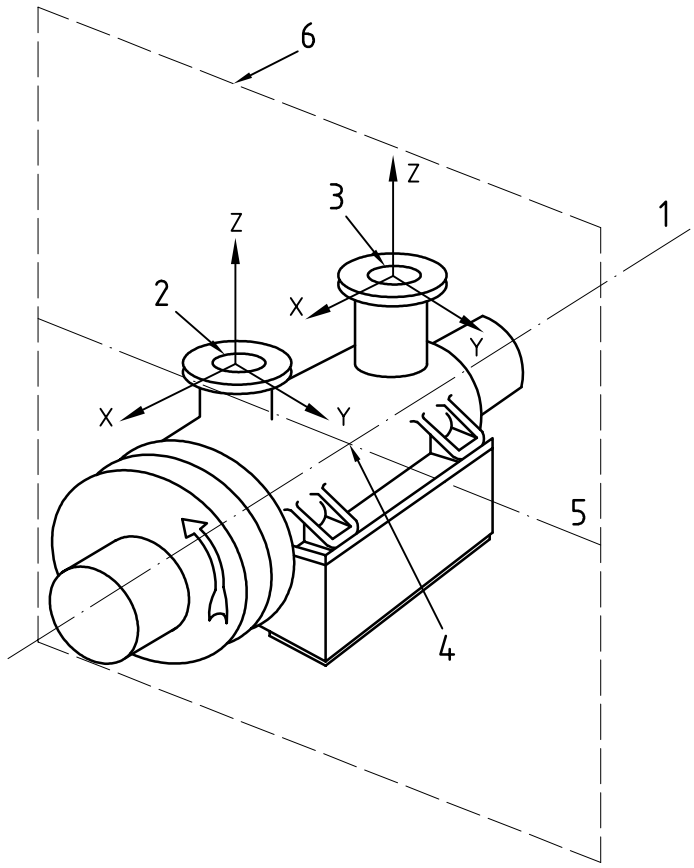

Key

1 shaft centreline
2 discharge nozzle
3 suction nozzle
4 centre of pump
5 pedestal centreline
6 vertical plane

Figure 24 — Coordinate system for the forces and moments in Table 4 — Horizontal pumps with top nozzles

5.6 Rotors

5.6.1 Unless otherwise approved by the purchaser, impellers shall be of the fully enclosed type.

NOTE Enclosed (closed) impellers are less sensitive to axial position and, therefore, preferable for long shaft assemblies where axial displacement due to thermal expansion/contraction or to thrust may be substantial. Semi-open impellers may offer higher efficiency, due to the elimination of disc friction from one shroud. The running clearances for semi-open impellers in vertical pumps can be adjusted from the coupling or top of the motor, thus possibly restoring efficiency and pump output without disassembly of pump parts. The open impeller is typically of an axial-flow propeller type designed for large capacities at low heads; the open impeller is also used for volute sump pumps with a separate discharge.

5.6.2 Impellers shall be single-piece castings, forgings or fabrications.

NOTE Impellers made as forgings or fabrications have machined waterways, which can offer improved performance for low specific speed designs.

Copyright American Petroleum Institute
Reproduced by IHS under license with API
Document provided by IHS Licensee=TECNA/5935100001, 11/02/2004 06:04:35 MST
Questions or comments about this message: please call the Document Policy Group

5.6.3 Impellers shall be keyed to the shaft. Pinning of impellers to the shaft is not acceptable. With the purchaser's approval, collets may be used in vertically suspended pumps. Overhung impellers shall be secured to the shaft by a cap screw or cap nut that does not expose shaft threads. The securing device shall be threaded to tighten by liquid drag on the impeller during normal rotation, and a positive mechanical locking method (for example, a staked and corrosion-resistant set-screw or a tongue-type washer) is required. Cap screws shall have fillets and a reduced diameter shank to reduce stress concentrations.

5.6.4 Impellers shall have solid hubs. Impellers may be made from a cored pattern if the core is completely filled with a suitable metal that has a melting point of not less than 260 °C (500 °F) for pumps with cast iron casings and not less than 540 °C (1 000 °F) for pumps with cast steel casings.

NOTE The requirement to fill cored impeller hubs is intended to minimize the danger to personnel if and when impellers are removed by heating.

5.6.5 For shafts that require sleeve gaskets to pass over threads, at least 1,5 mm (0,06 in) radial clearance shall be provided between the threads and the internal diameter of the gasket, and the diameter transition shall be chamfered in accordance with 5.3.12.

5.6.6 The shaft-to-seal sleeve fit(s) shall be h6/G7 in accordance with ISO 286 (all parts).

5.6.7 Areas of shafts that may be damaged by set-screws shall be relieved to facilitate the removal of sleeves or other components.

5.6.8 Shafts shall be machined and finished throughout their length so that the TIR is not more than 25 µm (0,001 in).

5.6.9 To obtain satisfactory seal performance, the shaft stiffness shall limit the total deflection under the most severe dynamic conditions over the allowable operating range of the pump with maximum diameter impeller(s) and the specified speed and fluid to 50 µm (0,002 in) at the primary seal faces. This shaft deflection limit may be achieved by a combination of shaft diameter, shaft span or overhang, and casing design (including the use of dual volutes or diffusers). For one- and two-stage pumps, no credit shall be taken for the fluid stiffening effects of impeller wear rings. For multistage pumps, fluid stiffening effects shall be considered and calculations shall be performed at both one and two times the nominal design clearances. The fluid stiffness of product-lubricated bearings and bearing bushings shall be calculated at both one and two times the nominal design clearances.

5.6.10 If non-contacting vibration probes are furnished in accordance with 6.4.2.2, the shaft sensing areas (both radial vibration and axial position) to be observed by radial vibration probes shall

a) be concentric with the bearing journals,

b) be free from stencil and scribe marks or any other surface discontinuity, such as an oil hole or a keyway, for a minimum distance of one probe tip diameter on each side of the probe,

c) not be metallized, sleeved, or plated on rotors of materials that exhibit consistent electrical properties,

d) have a final surface finish of 0,8 µm (32 micro-inches) Ra or smoother, preferably obtained by honing or burnishing,

e) be properly demagnetized to the levels specified in API 670, or otherwise treated so that the combined total electrical and mechanical runout does not exceed the following:

   1) for areas to be observed by radial vibration probes, 25 % of the allowed peak-to-peak vibration amplitude or 6 µm (0,25 mil), whichever is greater;

   2) for areas to be observed by axial position probes, 13 µm (0,5 mil).

Copyright American Petroleum Institute
Reproduced by IHS under license with API
Document provided by IHS Licensee=TECNA/5935100001, 11/02/2004 06:04:35 MST
Questions or comments about this message: please call the Document Policy Group

5.6.11 If the shaft is made of material that exhibits inconsistent electrical properties, the shaft sensing areas may be produced by shrink-fitting sleeves or "target rings" to the shaft. Target rings shall be finished in accordance with 5.6.10. The use of target rings requires specific purchaser approval.

Materials known to exhibit inconsistent electrical properties are high chromium alloys such as 17-4 PH, duplex stainless steel and ASTM A479 grade XM-19.

5.6.12 If it is specified that equipment shall have provisions for mounting non-contacting vibration probes (6.4.2.2), the shaft shall be prepared in accordance with the requirements of 5.6.10 and API 670.

5.6.13 If non-contacting vibration probes are furnished, accurate records of electrical and mechanical runout for the full 360° at each probe location shall be included in the mechanical test report.

5.6.14 All shaft keyways shall have fillet radii conforming to ASME B17.1.

NOTE This requirement applies to all shaft keyways, not just those at the coupling(s).

5.6.15 The rotor of one- and two-stage pumps shall be designed so its first dry-bending critical speed is at least 20 % above the pump's maximum continuous operating speed.

5.7 Wear rings and running clearances

5.7.1 Radial running clearances shall be used to limit internal leakage and, where necessary, balance axial thrust. Impeller pumping vanes or close axial clearances shall not be used to balance axial thrust. Renewable wear rings shall be provided in the pump casing. Impellers shall have either integral wear surfaces or renewable wear rings.

5.7.2 Mating wear surfaces of hardenable materials shall have a difference in Brinell hardness number of at least 50 unless both the stationary and the rotating wear surfaces have Brinell hardness numbers of at least 400.

5.7.3 Renewable wear rings, if used, shall be held in place by a press fit with locking pins, screws (axial or radial) or by tack welding. The diameter of a hole in a wear ring for a radial pin or threaded dowel shall not be more than one-third the width of the wear ring.

5.7.4 Running clearances shall meet the requirements of 5.7.4 a) through 5.7.4 c) below.

a) When establishing running clearances between wear rings and other moving parts, consideration shall be given to pumping temperatures, suction conditions, the liquid properties, the thermal expansion and galling characteristics of the materials, and pump efficiency. Clearances shall be sufficient to assure dependability of operation and freedom from seizure under all specified operating conditions.

b) For cast iron, bronze, hardened martensitic stainless steel and materials with similarly low galling tendencies, the minimum clearances given in Table 5 shall be used. For materials with higher galling tendencies and for all materials operating at temperatures above 260 °C (500 °F), 125 µm (0,005 in) shall be added to these diametral clearances.

c) For non-metallic wear ring materials with very low or no galling tendencies (see Annex H, Table H.4), clearances less than those given in Table 5 may be proposed by the vendor. Factors such as distortion and thermal gradients shall be considered, to ensure clearances are sufficient to provide dependability of operation and freedom from seizure under all specified operating conditions.

Copyright American Petroleum Institute
Reproduced by IHS under license with API
Document provided by IHS Licensee=TECNA/5935100001, 11/02/2004 06:04:35 MST
Questions or comments about this message: please call the Document Policy Group

Table 5 — Minimum running clearances

Diameter of rotating member at clearance mm	Minimum diametral clearance mm	Diameter of rotating member at clearance (in)	Minimum diametral clearance (in)
< 50	0,25	< 2,000	0,010
50 to 64.99	0,28	2,000 to 2,499	0,011
65 to 79,99	0,30	2,500 to 2,999	0,012
80 to 89,99	0,33	3,000 to 3,499	0,013
90 to 99,99	0,35	3,500 to 3,999	0,014
100 to 114,99	0,38	4,000 to 4,499	0,015
115 to 124,99	0,40	4,500 to 4,999	0,016
125 to 149,99	0,43	5,000 to 5,999	0,017
150 to 174,99	0,45	6,000 to 6,999	0,018
175 to 199,99	0,48	7,000 to 7,999	0,019
200 to 224,99	0,50	8,000 to 8,999	0,020
225 to 249,99	0,53	9,000 to 9,999	0,021
250 to 274,99	0,55	10,000 to 10,999	0,022
275 to 299,99	0,58	11,000 to 11,999	0,023
300 to 324,99	0,60	12,000 to 12,999	0,024
325 to 349,99	0,63	13,000 to 13,999	0,025
350 to 374,99	0,65	14,000 to 14,999	0,026
375 to 399,99	0,68	15,000 to 15,999	0,027
400 to 424,99	0,70	16,000 to 16,999	0,028
425 to 449,99	0,73	17,000 to 17,999	0,029
450 to 474,99	0,75	18,000 to 18,999	0,030
475 to 499,99	0,78	19,000 to 19,999	0,031
500 to 524,99	0,80	20,000 to 20,999	0,032
525 to 549,99	0,83	21,000 to 21,999	0,033
550 to 574,99	0,85	22,000 to 22,999	0,034
575 to 599,99	0,88	23,000 to 23,999	0,035
600 to 624,99	0,90	24,000 to 24,999	0,036
625 to 649,99	0,95	25,000 to 25,999	0,037

NOTE For diameters greater than 649,99 mm (25,999 in), the minimum diametral clearances shall be 0,95 mm (0,037 in) plus 1 µm for each additional 1 mm of diameter or fraction thereof (0,001 in for each additional 1 in).

5.8 Mechanical shaft seals

- **5.8.1** Pumps shall be equipped with mechanical seals and sealing systems in accordance with ISO 21049, including pump and seal interface dimensions (see Table 6 and Figure 25). The purchaser shall specify the category of seal required. The purchaser should use the data sheets in ISO 21049 for this purpose.

NOTE For the purpose of this provision, API 682 is equivalent to ISO 21049.

Copyright American Petroleum Institute
Reproduced by IHS under license with API
Document provided by IHS Licensee=TECNA/5935100001, 11/02/2004 06:04:35 MST
Questions or comments about this message: please call the Document Policy Group

5.8.2 The seal cartridge shall be removable without disturbing the driver.

5.8.3 The seal chamber shall conform to the dimensions shown in Figure 25 and Table 6. For pumps with flange and pressure ratings in excess of the minimum values in 5.3.5, the gland stud size and circle may increase. Larger studs shall be furnished only if required to meet the stress requirements of 5.3.4 or to sufficiently compress spiral-wound gaskets in accordance with manufacturer's specifications.

Dimensions in millimetres (inches)

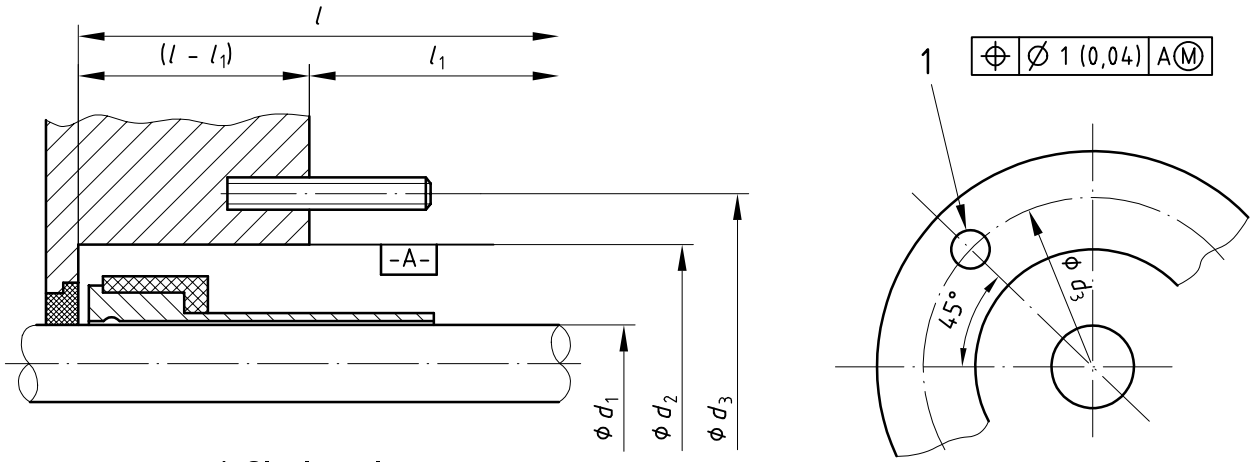

a) Single seal

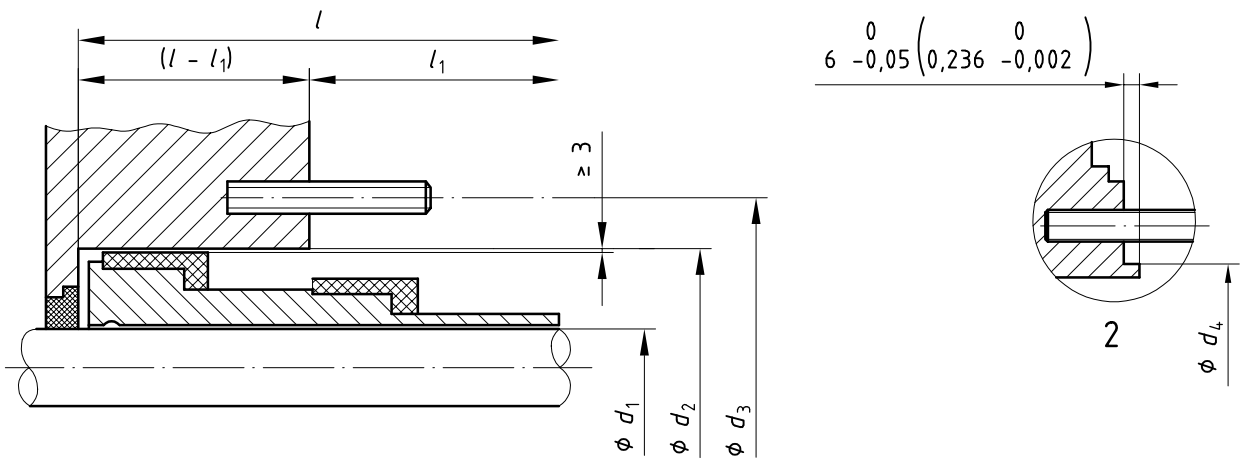

b) Dual seal

Key

1 gland studs (four)

2 optional outside gland rabbet

l total length to nearest obstruction

l_1 length from seal chamber face to nearest obstruction

Figure 25 — Chamber diagrams

Copyright American Petroleum Institute
Reproduced by IHS under license with API
Document provided by IHS Licensee=TECNA/5935100001, 11/02/2004 06:04:35 MST
Questions or comments about this message: please call the Document Policy Group

Table 6 — Standard dimensions for seal chambers, seal gland attachments and cartridge mechanical seal sleeves (see Figure 25)

Dimensions in millimetres (inches)

Seal chamber size	Shaft diameter max.[a] d_1	Seal chamber bore[b] d_2	Gland stud circle d_3	Outside gland rabbet[c] d_4	Total length min.[d] l	Clear length min.[d] l_1	Stud size SI	Stud size (USC)
1	20,00 (0,787)	70,00 (2,756)	105 (4,13)	85,00 (3,346)	150 (5,90)	100 (3,94)	M12 × 1,75	1/2”-13
2	30,00 (1,181)	80,00 (3,150)	115 (4,53)	95,00 (3,740)	155 (6,10)	100 (3,94)	M12 × 1,75	1/2”-13
3	40,00 (1,575)	90,00 (3,543)	125 (4,92)	105,00 (4,134)	160 (6,30)	100 (3,94)	M12 × 1,75	1/2”-13
4	50,00 (1,968)	100,00 (3,937)	140 (5,51)	115,00 (4,528)	165 (6,50)	110 (4,33)	M16 × 2,0	5/8”-11
5	60,00 (2,362)	120,00 (4,724)	160 (6,30)	135,00 (5,315)	170 (6,69)	110 (4,33)	M16 × 2,0	5/8”-11
6	70,00 (2,756)	130,00 (5,118)	170 (6,69)	145,00 (5,709)	175 (6,89)	110 (4,33)	M16 × 2,0	5/8”-11
7	80,00 (3,150)	140,00 (5,512)	180 (7,09)	155,00 (6,102)	180 (7,09)	110 (4,33)	M16 × 2,0	5/8”-11
8	90,00 (3,543)	160,00 (6,299)	205 (8,07)	175,00 (6,890)	185 (7,28)	120 (4,72)	M20 × 2,5	3/4”-10
9	100,00 (3,937)	170,00 (6,693)	215 (8,46)	185,00 (7,283)	190 (7,48)	120 (4,72)	M20 × 2,5	3/4”-10
10	110,00 (4,331)	180,00 (7,087)	225 (8,86)	195,00 (7,677)	195 (7,68)	120 (4,72)	M20 × 2,5	3/4”-10

[a] Dimensions to Tolerance Class h6.

[b] Dimensions to Tolerance Class H7; for axially split pumps, an additional tolerance of ± 75 µm (0,003 in) to allow for gasket thickness.

[c] Dimensions to Tolerance Class f7.

[d] Shaft deflection criteria (5.6.9) may require (l) and (l_1) dimensions on size 1 and size 2 seal chambers to be reduced below the minimum values listed, depending on specific pump construction and casing design.

5.8.4 Provisions shall be made to centre the seal gland and/or chamber with either an inside or outside diameter register fit. The register fit surface shall be concentric to the shaft and shall have a total indicated runout of not more than 125 µm (0,005 in). Using the seal gland bolts to centre mechanical seal components is not acceptable (see Annex K).

5.8.5 Seal chamber face runout (TIR) shall not exceed 0,5 µm/mm (0,000 5 in/in) of seal chamber bore (see Annex K).

5.8.6 Specified seal and pump connections shall be identified by symbols permanently marked into the component (such as stamped, cast, or chemically etched). Symbols shall be in accordance with those specified in ISO 21049.

5.8.7 Seal glands and seal chambers shall have provision for only those connections required by the seal flush plan. If additional tapped connection points are specified and are not used, they shall be plugged in accordance with 5.4.3.7.

5.8.8 Provision shall be made to ensure complete venting of the seal chamber.

● **5.8.9** If specified, jackets shall be provided on seal chambers for heating. Heating requirements shall be agreed upon by the purchaser, vendor, and seal manufacturer for high melting point products.

5.8.10 Mechanical seals and glands for all pumps, except vertically-suspended pumps shipped without drivers mounted, shall be installed in the pump before shipment and shall be clean and ready for initial service. If seals require final adjustment or installation in the field, the vendor shall attach a metal tag warning of this requirement.

Copyright American Petroleum Institute
Reproduced by IHS under license with API
Document provided by IHS Licensee=TECNA/5935100001, 11/02/2004 06:04:35 MST
Questions or comments about this message: please call the Document Policy Group

5.8.11 The mating joint between the seal gland and the seal chamber face shall incorporate a confined gasket to prevent blowout. The gasket shall be of the controlled compression type, for example an O-ring or a spiral-wound gasket, with a metal-to-metal joint contact. If space or design limitations make this requirement impractical, an alternative seal gland design shall be submitted to the purchaser for approval.

5.9 Dynamics

5.9.1 General

The topics of critical speed and lateral analysis are covered in the subclause dealing with each specific pump type.

5.9.2 Torsional analysis

5.9.2.1 Unless otherwise specified, a torsional analysis shall be performed by the manufacturer having unit responsibility if the driver is one of the following:

a) electric motor, or turbine, through gear rated 1 500 kW (2 000 hp) or higher;

b) internal combustion engine rated 250 kW (335 hp) or higher;

c) synchronous motor rated 500 kW (670 hp) or higher;

d) electric motor with variable-frequency drive (VFD) rated 1 000 kW (1 350 hp) or higher.

The analysis shall be for the train as a whole unless the train includes a device that has weak dynamic coupling, for example a hydraulic coupling or torque converter.

5.9.2.2 For the corresponding list item in 5.9.2.1, excitation at the following frequencies shall be evaluated:

a) train with gear(s): 1 × r/min and 2 × r/min of either shaft;

b) engine drive: n × r/min;

c) synchronous motor: n × slip frequency, 1 × line frequency and 2 × line frequency;

d) variable-frequency drive: n × r/min, 1 × line frequency and 2 × line frequency

where

r/min is the rotor speed, expressed in revolutions per minute;

n is an integer determined by the drive manufacturer;

— for engines: derived from the number of power strokes per revolution;

— for motors: derived from the number of poles.

The excitation frequencies for motor drives, items c) and d), include transient and steady-state conditions.

5.9.2.3 The torsional natural frequencies of the complete train shall be at least 10 % above or 10 % below any possible excitation frequency within the specified range of operating speeds (from minimum to maximum continuous speed).

5.9.2.4 If torsional resonances are calculated to fall within the margin specified in 5.9.2.3 (and the purchaser and the vendor have agreed that all efforts to remove the resonance from within the limiting frequency range have been exhausted), a stress analysis shall be performed to demonstrate that the

Copyright American Petroleum Institute
Reproduced by IHS under license with API
Document provided by IHS Licensee=TECNA/5935100001, 11/02/2004 06:04:35 MST
Questions or comments about this message: please call the Document Policy Group

resonances have no adverse effect on the complete train. The assumptions made in this analysis regarding the magnitude of excitation and the degree of damping shall be clearly stated. The acceptance criteria for this analysis shall be agreed upon by the purchaser and the vendor.

5.9.2.5 If a torsional analysis is performed, a Campbell diagram shall be furnished to the purchaser for information only.

● **5.9.2.6** If specified, the manufacturer shall furnish a detailed report of the torsional analysis. The report shall include the following:

a) description of the method used to calculate the natural frequencies;

b) diagram of the mass elastic system;

c) table of the mass moment and torsional stiffness of each element of the mass elastic system;

d) Campbell diagram;

e) mode-shape diagram with peak stresses shown for each resonant frequency, if a stress analysis is performed.

5.9.3 Vibration

5.9.3.1 Centrifugal pump vibration varies with flow, usually being a minimum in the vicinity of best efficiency point flow and increasing as flow is increased or decreased. The change in vibration as flow is varied from best efficiency point flow depends upon the pump's energy density, its specific speed and its suction-specific speed. In general, the change in vibration increases with increasing energy density, higher specific speed, and higher suction-specific speed.

With these general characteristics, a centrifugal pump's operating flow range can be divided into two regions, one termed the best efficiency or preferred operating region, over which the pump exhibits low vibration, the other termed the allowable operating region, with its limits defined as those capacities at which the pump's vibration reaches a higher but still "acceptable" level. Figure 26 illustrates the concept. Factors other than vibration, for example, temperature rise with decreasing flow or NPSHR with increasing flow, may dictate a narrower allowable operating region. See also 5.1.14.

The allowable operating region shall be stated in the proposal. If the allowable operating region is limited by a factor other than vibration, that factor shall also be stated in the proposal.

5.9.3.2 During the performance test, overall vibration measurements over a range of 5 Hz to 1 000 Hz and a Fast Fourier Transform (FFT) spectrum shall be made at each test point except shutoff. The vibration measurements shall be made at the following locations:

a) on the bearing housing(s) or equivalent location(s) of all pumps, at the positions shown on Figure 27 and Figure 28;

b) on the shaft of pumps with hydrodynamic bearings with proximity probes, if the pump has provisions for proximity probes.

● **5.9.3.3** The FFT spectra shall include the range of frequencies from 5 Hz to 2Z times running speed (where Z is the number of impeller vanes; in multistage pumps with different impellers, Z is the highest number of impeller vanes in any stage). If specified the plotted spectra shall be included with the pump test results.

NOTE The discrete frequencies 1,0, 2,0, and Z times running speed are associated with various pump phenomena, and are therefore of particular interest in the spectra.

Copyright American Petroleum Institute
Reproduced by IHS under license with API
Document provided by IHS Licensee=TECNA/5935100001, 11/02/2004 06:04:35 MST
Questions or comments about this message: please call the Document Policy Group

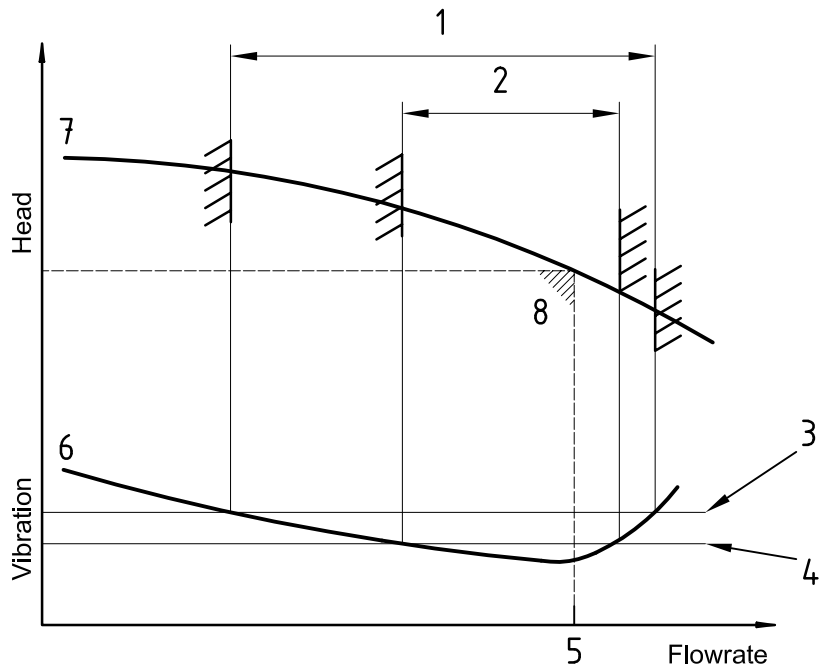

Key

1 allowable operating region of flow

2 preferred operating region of flow

3 maximum allowable vibration limit at flow limits

4 basic vibration limit

5 best efficiency point, flowrate

6 typical vibration vs flowrate curve showing maximum allowable vibration

7 head-flowrate curve

8 best efficiency point, head and flowrate

Figure 26 — Relationship between flow and vibration

Copyright American Petroleum Institute
Reproduced by IHS under license with API
Document provided by IHS Licensee=TECNA/5935100001, 11/02/2004 06:04:35 MST
Questions or comments about this message: please call the Document Policy Group

Dimensions in millimetres (inches)

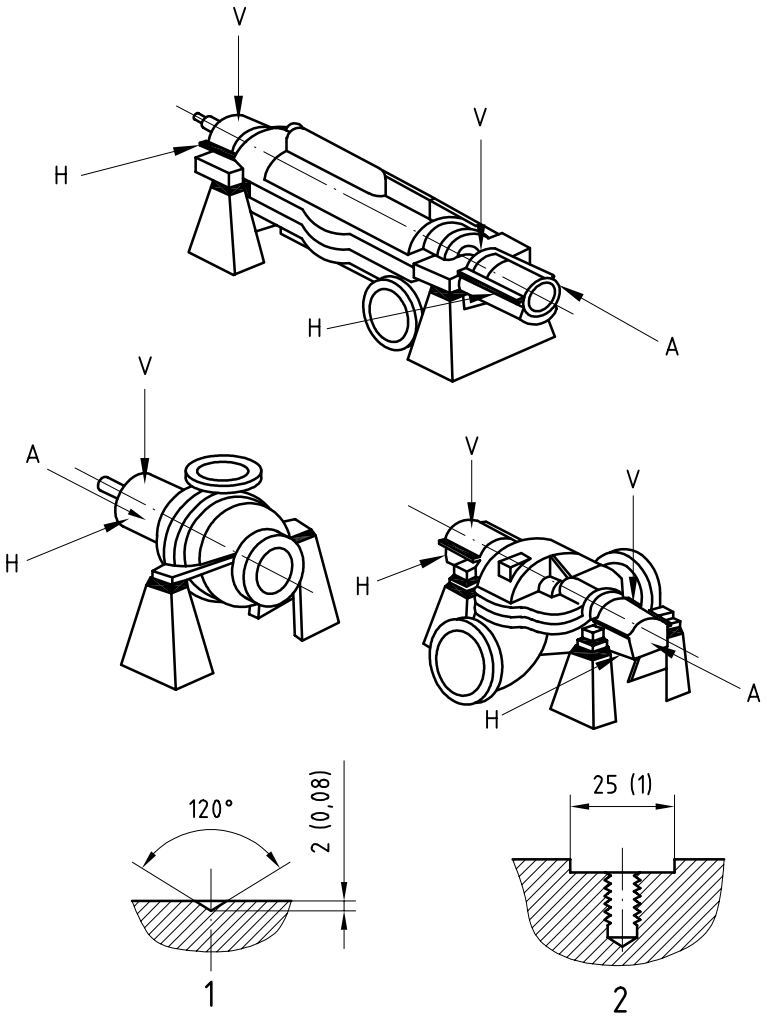

Key

1 dimple (see 5.10.2.10)

2 optional arrangement for mounting vibration-measuring equipment (see 5.10.2.11)

A axial

H horizontal

V vertical

Figure 27 — Locations for taking vibration readings on horizontal pumps

Copyright American Petroleum Institute
Reproduced by IHS under license with API
Document provided by IHS Licensee=TECNA/5935100001, 11/02/2004 06:04:35 MST
Questions or comments about this message: please call the Document Policy Group

Dimensions in millimetres (inches)

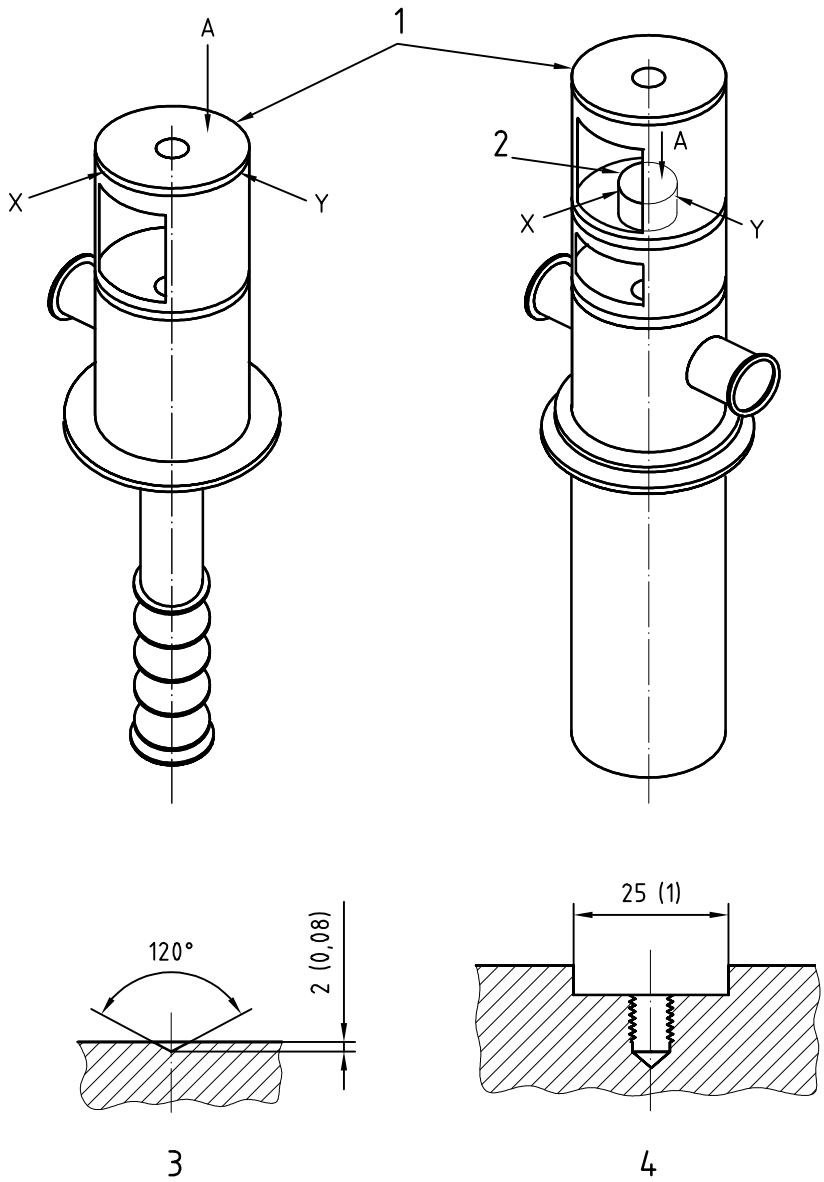

Key

1 driver mounting surface

2 pump bearing housing

3 dimple (see 5.10.2.10)

4 optional arrangement for mounting vibration-measuring equipment (see 5.10.2.11)

A axial

X X axis

Y Y axis

Figure 28 — Locations for taking vibration readings on vertically suspended pumps

5.9.3.4 Bearing housing overall vibration measurements shall be made in root mean square (RMS) velocity, in millimetres per second (inches per second).

5.9.3.5 Shaft vibration measurement shall be peak-to-peak displacement, in micrometres (mils).

Copyright American Petroleum Institute
Reproduced by IHS under license with API
Document provided by IHS Licensee=TECNA/5935100001, 11/02/2004 06:04:35 MST
Questions or comments about this message: please call the Document Policy Group

5.9.3.6 The vibration measured during the performance test shall not exceed the values shown in the following:

— Table 7 for overhung and between-bearing pumps.

— Table 8 for vertically suspended pumps.

Pumps furnished with proximity probes shall meet both bearing housing and shaft vibration limits.

NOTE Bearing housing overall vibration limits are defined for RMS measurements only.

Table 7 — Vibration limits for overhung and between-bearings pumps

Criteria	**Location of vibration measurement**	
	Bearing housing (see Figure 27)	Pump shaft (adjacent to bearing)
	Pump bearing type	
	All	Hydrodynamic journal bearings
	Vibration at any flowrate within the pump's preferred operating region	
Overall	For pumps running at up to 3 600 r/min and absorbing up to 300 kW (400 hp) per stage: $v_u < 3{,}0$ mm/s RMS (0,12 in/s RMS) For pumps running above 3 600 r/min or absorbing more than 300 kW (400 hp) per stage: see Figure 29	$A_u < (5{,}2 \times 10^6 / n)^{0,5}$ µm peak-to-peak [$(8\ 000 / n)^{0,5}$ mils peak-to-peak] Not to exceed: $A_u < 50$ µm peak-to-peak (2,0 mils peak-to-peak)
Discrete frequencies	$v_f < 0{,}67\ v_u$	for $f < n$: $A_f < 0{,}33\ A_u$
Allowable increase in vibration at flows outside the preferred operating region but within the allowable operating region	30 %	30 %

Power calculated for BEP of rated impeller with liquid relative density (specific gravity) = 1,0

where

v_u is the unfiltered velocity, as measured;

v_f is the filtered velocity;

A_u is the amplitude of unfiltered displacement, as measured;

A_f is the amplitude of filtered displacement;

f is the frequency;

n is the rotational speed, expressed in revolutions per minute.

Vibration velocity and amplitude values calculated from the basic limits shall be rounded off to two significant figures.

Copyright American Petroleum Institute
Reproduced by IHS under license with API
Document provided by IHS Licensee=TECNA/5935100001, 11/02/2004 06:04:35 MST
Questions or comments about this message: please call the Document Policy Group

Table 8 — Vibration limits for vertically-suspended pumps

Criteria	Location of vibration measurement	
	Pump thrust bearing housing or Motor mounting flange (see Figure 28)	Pump shaft (adjacent to bearing)
	Pump bearing type	
	All	Hydrodynamic guide bearing adjacent to accessible region of shaft
	Vibration at any flow within the pump's preferred operating region	
Overall	$v_u < 5{,}0$ mm/s RMS (0,20 in/s RMS)	$A_u < (6{,}2 \times 10^6 / n)^{0,5}$ µm peak-to-peak [$(10\ 000/ n)^{0,5}$ mils peak-to-peak] Not to exceed: $A_u < 100$ µm peak-to-peak (4,0 mils peak-to-peak)
Discrete frequencies	$v_f < 0{,}67\ v_u$	$A_f < 0{,}75\ A_u$
Allowable increase in vibration at flows outside the preferred operating region but within the allowable operating region	30 %	30 %

Vibration velocity and amplitude values calculated from the basic limits shall be rounded off to two significant figures

where

v_u is the unfiltered velocity, as measured;

v_f is the filtered velocity;

A_u is the amplitude of unfiltered displacement, as measured;

A_f is the amplitude of filtered displacement;

n is the rotational speed, expressed in revolutions per minute.

Copyright American Petroleum Institute
Reproduced by IHS under license with API
Document provided by IHS Licensee=TECNA/5935100001, 11/02/2004 06:04:35 MST
Questions or comments about this message: please call the Document Policy Group

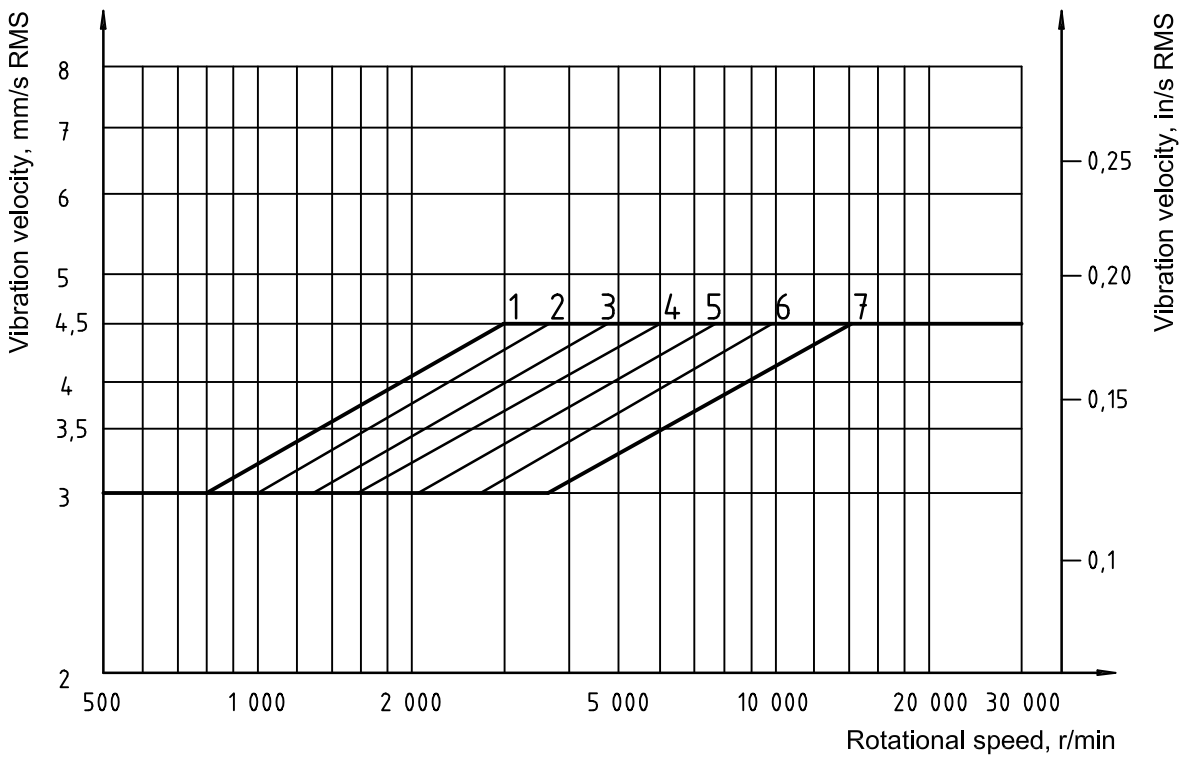

Key

1 $P \geqslant$ 3 000 kW/stage

2 P = 2 000 kW/stage

3 P = 1 500 kW/stage

4 P = 1 000 kW/stage

5 P = 700 kW/stage

6 P = 500 kW/stage

7 $P \leqslant$ 300 kW/stage

The equation for transition from 3,0 mm/s to 4,5 mm/s is $v_u = 3{,}0\left(n/3600\right)^{0{,}30}\left[\left(\text{kW/stage}\right)/300\right]^{0{,}21}$

Figure 29 — Vibration limits for horizontal pumps running above 3 600 r/min or absorbing more than 300 kW (400 hp) per stage

5.9.3.7 At any speed greater than the maximum continuous speed, up to and including the trip speed of the driver, the vibration shall not exceed 150 % of the maximum value recorded at the maximum continuous speed.

5.9.3.8 Variable-speed pumps shall operate over their specified speed range without exceeding the vibration limits of this International Standard.

5.9.4 Balancing

5.9.4.1 Impellers, balancing drums, and similar major rotating components shall be dynamically balanced to ISO 1940-1 grade G2.5. The mass of the arbor used for balancing shall not exceed the mass of the component being balanced.

5.9.4.2 Component balancing may be single-plane if the ratio D/b (see Figure 30) is 6,0 or greater.

Copyright American Petroleum Institute
Reproduced by IHS under license with API
Document provided by IHS Licensee=TECNA/5935100001, 11/02/2004 06:04:35 MST
Questions or comments about this message: please call the Document Policy Group

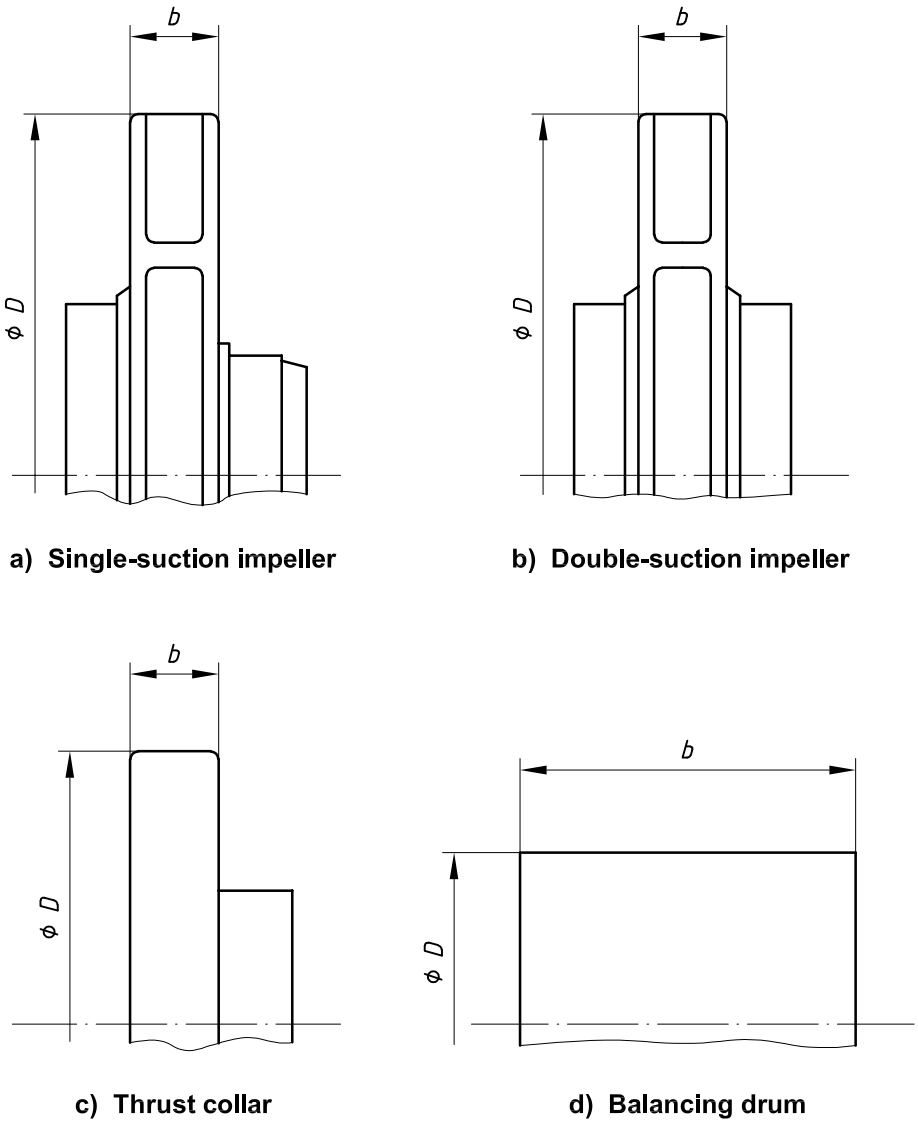

D diameter

b width

Figure 30 — Rotating component dimensions to determine if single-plane balancing is allowable

5.9.4.3 Rotor balancing shall be performed as required in the specific pump clauses.

● **5.9.4.4** If specified, impellers, balancing drums and similar rotating components shall be dynamically balanced to ISO 1940-1 grade G1 (equivalent to 4 W/n in USC terminology).

In USC units, where the symbol W is used for mass, unbalance is expressed as follows:

$$U = KW / n$$

where

U is the unbalance per plane, expressed in ounce-inches;

K is a constant;

Copyright American Petroleum Institute
Reproduced by IHS under license with API
Document provided by IHS Licensee=TECNA/5935100001, 11/02/2004 06:04:35 MST
Questions or comments about this message: please call the Document Policy Group

W is the component mass (for components), expressed in pounds; or the load per balancing machine journal (for rotors), expressed in pounds;

n is the rotational speed of the pump, expressed in revolutions per minute.

In International Standards, unbalance is expressed as a balance quality grade of ISO 1940-1. Each of the ISO balance quality grades covers a range of unbalance. The nominal equivalent US Customary unit limits given throughout this International Standard correspond approximately to the midpoint of the ISO range.

With modern balancing machines, it is feasible to balance components mounted on their arbors to $U = 4W/n$ (USC units) (nominally equivalent to ISO grade G1), or even lower depending upon the mass of the assembly, and to verify the unbalance of the assembly with a residual unbalance check. However, the mass eccentricity, e, associated with unbalance less than $U = 8W/n$ (USC units) (nominally equivalent to ISO grade G2.5) is so small [e.g. $U = 4W/n$ (USC units) gives e = 0,000 070 in for an assembly intended to run at 3600 r/min] that it cannot be maintained if the assembly is dismantled and remade. Balance grades below G2.5 ($8W/n$) (USC units) are, therefore, not repeatable for components.

5.10 Bearings and bearing housings

5.10.1 Bearings

5.10.1.1 Each shaft shall be supported by two radial bearings and one double-acting axial (thrust) bearing which may or may not be combined with one of the radial bearings. Bearings shall be one of the following arrangements: rolling-element radial and thrust, hydrodynamic radial and rolling-element thrust, or hydrodynamic radial and thrust. Unless otherwise specified, the bearing type and arrangement shall be selected in accordance with the limitations in Table 9 or as specified by the purchaser.

5.10.1.2 Thrust bearings shall be sized for continuous operation under all specified conditions, including maximum differential pressure. All loads shall be determined at design internal clearances and also at twice design internal clearances. In addition to thrust from the rotor and any internal gear reactions due to the most extreme allowable conditions, the axial force transmitted through flexible couplings shall be considered a part of the duty of any thrust bearing. Thrust bearings shall provide full-load capabilities if the pump's normal direction of rotation is reversed.

Thrust forces for flexible metal-element couplings shall be calculated on the basis of the maximum allowable deflection permitted by the coupling manufacturer.

If a sleeve bearing motor (without a thrust bearing) is directly connected to the pump shaft with a coupling, the coupling-transmitted thrust shall be assumed to be the maximum motor thrust.

5.10.1.3 Rolling-element bearings shall be located, retained and mounted in accordance with the following.

a) Bearings shall be retained on the shaft with an interference fit and fitted into the housing with a diametral clearance, both in accordance with ABMA 7.

b) Bearings shall be mounted directly on the shaft. Bearing carriers are acceptable only with purchaser approval.

c) Bearings shall be located on the shaft using shoulders, collars or other positive locating devices. Snap rings and spring-type washers are not acceptable.

d) The device used to lock thrust bearings to shafts shall be restricted to a nut with a tongue-type lock washer.

NOTE This subclause applies to all rolling-element bearings, including both ball and roller types. For certain roller bearings, such as cylindrical roller types with separable races, bearing-housing diametral clearance may not be appropriate.

Copyright American Petroleum Institute
Reproduced by IHS under license with API
Document provided by IHS Licensee=TECNA/5935100001, 11/02/2004 06:04:35 MST
Questions or comments about this message: please call the Document Policy Group

5.10.1.4 Single-row deep-groove ball bearings shall have radial internal clearance in accordance with ISO 5753 Group 3 [larger than "N" (Normal) internal clearance]. Single- or double-row bearings shall not have filling slots (Conrad type). Greater internal clearances can reduce the temperature rise of the lubricant. However, vibration velocities may be increased with greater clearances. The vendor shall ensure that values for temperature rise (5.10.2.4) and vibration (5.9.3.6) meet the requirements of this International Standard.

NOTE For the purpose of this provision, ABMA 20 Group 3 is equivalent to ISO 5753 Group 3.

5.10.1.5 Ball thrust bearings shall be of the paired single-row, 40° (0,7 rad) angular contact type (7 000 series) with machined brass cages. Non-metallic cages shall not be used. Pressed steel cages may be used if approved by the purchaser. Unless otherwise specified, bearings shall be mounted in a paired arrangement installed back-to-back. The need for bearing clearance or preload shall be determined by the vendor to suit the application and meet the bearing life requirements of Table 9.

NOTE There are applications where alternative bearing arrangements may be preferable, particularly where bearings operate continuously with minimal axial loads.

5.10.1.6 If loads exceed the capability of paired angular-contact bearings as described in 5.10.1.5, alternative rolling-element arrangements may be proposed.

5.10.2 Bearing housings

5.10.2.1 Bearing housings shall be arranged so that bearings can be replaced without disturbing pump drives or mountings.

● **5.10.2.2** Bearing housings for oil-lubricated non-pressure-fed bearings shall be provided with threaded and plugged fill and drain openings of at least DN 15 (1/2 NPS). The housings shall be equipped with constant-level sight feed oilers at least 12 dl (4 fl oz) in volume, with a positive level positioner (not an external screw), heat-resistant glass containers, and protective wire cages. Means shall be provided, such as a bulls-eye or an overfill plug, for detecting overfilling of the housings. A permanent indication of the proper oil level shall be accurately located and clearly marked on the outside of the bearing housing with permanent metal tags, marks inscribed in the castings, or other durable means. The purchaser shall specify if a particular model of oiler is required.

5.10.2.3 Bearing housings for pressure-lubricated hydrodynamic bearings shall be arranged to minimize foaming. The drain system shall be adequate to maintain the oil and foam level below shaft end seals.

5.10.2.4 Sufficient cooling, including an allowance for fouling, shall be provided to maintain oil and bearing temperatures as follows, based on the specified operating conditions and an ambient temperature of 43 °C (110 °F):

a) for pressurized systems, oil outlet temperature below 70 °C (160 °F) and bearing metal temperatures (if bearing-temperature sensors are supplied) less than 93 °C (200 °F). During shop testing, and under the most adverse specified operating conditions, the bearing-oil temperature rise shall not exceed 28 K (50 °R);

b) for ring-oiled or splash systems, oil sump temperature below 82 °C (180 °F). During shop testing, the sump oil temperature rise shall not exceed 40 K (70 °R) and (if bearing-temperature sensors are supplied) outer ring temperatures shall not exceed 93 °C (200 °F).

NOTE Pumps equipped with ring-oiled or splash lubrication systems might not reach temperature stabilization during performance tests of short duration. Temperature-stabilization testing is addressed in 7.3.4.7.1.

Copyright American Petroleum Institute
Reproduced by IHS under license with API
Document provided by IHS Licensee=TECNA/5935100001, 11/02/2004 06:04:35 MST
Questions or comments about this message: please call the Document Policy Group

Table 9 — Bearing selection

Condition	Bearing type and arrangement
Radial and thrust bearing speed and life within limits for rolling-element bearings and Pump energy density below limit	Rolling-element radial and thrust
Radial bearing speed or life outside limits for rolling-element bearings and Thrust bearing speed and life within limits and Pump energy density below limit	Hydrodynamic radial and rolling-element thrust or Hydrodynamic radial and thrust
Radial and thrust bearing speed or life outside limits for rolling-element bearings or Pump energy density above limit	Hydrodynamic radial and thrust

Limits are as follows.

a) Rolling-element bearing speed: Factor, $n.d_m$ shall not exceed 500 000

where

d_m is the mean bearing diameter [$(d + D)/2$)], expressed in millimetres;

n is the rotational speed, expressed in revolutions per minute.

b) Rolling-element bearing life: basic rating life, L_{10}, in accordance with ISO 281, equivalent to at least 25 000 h with continuous operation at rated conditions, and at least 16 000 h at maximum radial and axial loads and rated speed.

NOTE ISO 281 defines basic rating life, L_{10}, in units of millions of revolutions. Industry practice is to convert this to hours and to refer to it as L_{10h}.

c) Hydrodynamic radial and thrust bearings shall be used if the energy density [i.e. the product of pump rated power, kW (hp), and rated speed, r/min] is $4{,}0 \times 10^6$ kW/min ($5{,}4 \times 10^6$ hp/min) or greater.

NOTE For the purpose of this provision, ABMA 9 is equivalent to ISO 281.

5.10.2.5 Where water cooling is required, cooling coils are preferred. The coils (including fittings) shall be of non-ferrous material or austenitic stainless steel and shall have no internal pressure joints. Tubing or pipe shall have a minimum thickness of 1,0 mm (0,040 in) and shall be at least 12 mm (0,50 in) outside diameter. Water jackets, if used, shall have only external connections between upper and lower housing jackets and shall have neither gasketed nor threaded connection joints which may allow water to leak into the oil reservoir. Water jackets shall be designed to cool the oil rather than the outer bearing ring.

NOTE Cooling the outer ring can reduce bearing internal clearance and cause bearing failure.

5.10.2.6 For pumps handling flammable or hazardous liquids, bearing housings, load-carrying bearing housing covers, and brackets between the pump casing or head and the bearing housings shall be steel. Driver supports for vertical pumps which utilize thrust bearings in the driver to support the shaft shall be steel.

5.10.2.7 Bearing housings for rolling-element bearings shall be designed to prevent contamination by moisture, dust and other foreign matter. This shall be achieved without the requirement for external service, for example air purge. Bearing housings shall be equipped with replaceable labyrinth-type or magnetic-type end seals and deflectors where the shaft passes through the housing. Lip-type seals shall not be used. The seals and deflectors shall be made of non-sparking materials. The design of the seals and deflectors shall effectively retain oil in the housing and prevent entry of foreign material into the housing.

Copyright American Petroleum Institute
Reproduced by IHS under license with API
Document provided by IHS Licensee=TECNA/5935100001, 11/02/2004 06:04:35 MST
Questions or comments about this message: please call the Document Policy Group

5.10.2.8 Bearings and bearing housings shall meet the requirements of 5.10.2.8 a) through 5.10.2.8 e) below if oil-mist lubrication is specified (see 5.11 3).

a) A threaded 6 mm (1/4 NPS) oil-mist inlet connection shall be provided in the top half of the bearing housing. Pure oil-mist fitting connections shall be located so that oil mist will flow through rolling-element bearings. If bearing-housing design is such that short circuiting cannot be avoided, directional oil-mist reclassifiers may be furnished to ensure positive oil-mist circulation through the bearings.

b) A threaded 6 mm (1/4 NPS) vent connection shall be provided on the housing or end cover for each of the spaces between the rolling-element bearings and the housing-shaft closures. Alternatively, where oil-mist connections are between each housing-shaft closure and the bearings, one vent central to the housing shall be supplied. Housings with only sleeve-type bearings shall have the vent located near the end of the housing.

c) Shielded or sealed bearings shall not be used.

d) If pure oil-mist lubrication is specified, oil rings or flingers and constant-level oilers shall not be provided, and a mark indicating the oil level is not required. If purge oil-mist lubrication is specified, these items shall be provided and the oiler shall be piped so that it is maintained at the internal pressure of the bearing housing.

NOTE At process operating temperatures above 300 °C (570 °F), bearing housings with pure oil-mist lubrication may require special features to reduce heating of the bearing races by heat transfer. Typical features are:

1) heat sink type flingers;

2) stainless steel shafts having low thermal conductivity;

3) thermal barriers;

4) fan cooling;

5) purge oil-mist lubrication (in place of pure oil mist) with oil (sump) cooling.

e) The oil mist supply and drain fittings shall be provided by the purchaser.

5.10.2.9 Housings for ring oil-lubricated bearings shall be provided with plugged ports positioned to allow visual inspection of the oil rings while the pump is running.

5.10.2.10 All bearing housings shall be dimpled at the locations shown on Figures 27 and 28 to facilitate consistent vibration measurements. The dimples shall be suitable for accurate location of a hand-held vibration transducer with an extension “wand”. Dimples shall be either cast or machined and shall be nominally 2 mm (0,080 in) deep with an included angle of 120°.

● **5.10.2.11** If specified, bearing housings shall have a threaded connection(s) for permanently mounting vibration transducers in accordance with API 670. If metric fasteners are supplied, the threads shall be M8. See Figures 27 and 28.

● **5.10.2.12** If specified, a flat surface at least 25 mm (1 in) in diameter shall be supplied for the location of magnetic-based vibration-measuring equipment.

5.11 Lubrication

5.11.1 Unless otherwise specified, bearings and bearing housings shall be designed for oil lubrication using a mineral (hydrocarbon) oil.

5.11.2 The operation and maintenance manual shall describe how the lubrication system circulates oil.

Copyright American Petroleum Institute
Reproduced by IHS under license with API
Document provided by IHS Licensee=TECNA/5935100001, 11/02/2004 06:04:35 MST
Questions or comments about this message: please call the Document Policy Group

- **5.11.3** If specified, provisions shall be made for either pure oil or purge oil-mist lubrication (see 5.10.2.8 for requirements).

- **5.11.4** If specified, rolling-element bearings shall be grease-lubricated in accordance with a) through d) below.

  a) Grease life (re-lubrication interval) shall be estimated using the method recommended by the bearing manufacturer or an alternative method approved by the purchaser.

  b) Grease lubrication shall not be used if the estimated grease life is less than 2 000 h.

  c) If the estimated grease life is 2 000 h or greater but less than 25 000 h, provision shall be made for re-greasing the bearings in service and for the effective discharge of old or excess grease, and the vendor shall advise the purchaser of the required re-greasing interval.

  d) If the estimated grease life is 25 000 h or more, grease nipples or any other system for the addition of grease in service shall not be fitted.

5.12 Materials

5.12.1 General

- **5.12.1.1** The purchaser shall specify the material class for pump parts. Table G.1 provides a guide showing material classes that may be appropriate for various services. Alternative materials recommended for the service by the vendor, including material that can improve life and performance in service, may also be included in the proposal and listed on the final data sheets.

  5.12.1.2 The material specification of all components listed in Table H.1 shall be clearly stated in the vendor's proposal. Materials shall be identified by reference to applicable International Standards, including the material grade (Tables H.2 and H.3 may be used for guidance). If International Standard materials are not available, internationally recognized national or other standards may be used. If no such designations are available, the vendor's material specification, giving physical properties, chemical composition and test requirements, shall be included in the proposal.

  5.12.1.3 The material specification of all gaskets and O-rings exposed to the pumped fluid shall be identified in the proposal. O-rings shall be selected and their application limited as specified in ISO 21049.

  5.12.1.4 Pump parts having strength or pressure-integrity requirements are designated as "full compliance" materials in Table H.1 and shall meet all the requirements of the agreed specifications. All other parts (e.g. if corrosion resistance is the primary concern) need only comply with the specified chemical composition. Auxiliary piping materials are covered in 6.5.

- **5.12.1.5** The vendor shall specify the optional tests and inspection procedures that are necessary to ensure that materials are satisfactory for the service. The purchaser shall specify if any additional tests and inspections are required, especially for materials used for components or in services considered critical by the purchaser. Purchaser-specified test and inspection requirements should be identified in the "remarks" section of the data sheets (Annex N).

  5.12.1.6 Materials for pump pressure casings shall be in accordance with the following.

  a) Pressure casing parts of double-casing pumps shall be of carbon steel or alloy steel.

  b) Pressure casing parts of pumps that are to handle flammable or hazardous liquids shall be of carbon steel or alloy steel.

  c) Cast iron construction may be offered for other services.

Copyright American Petroleum Institute
Reproduced by IHS under license with API
Document provided by IHS Licensee=TECNA/5935100001, 11/02/2004 06:04:35 MST
Questions or comments about this message: please call the Document Policy Group

5.12.1.7 If austenitic stainless steel parts exposed to conditions that can promote intergranular corrosion are to be fabricated, hard faced, overlaid or repaired by welding, they shall be made of low-carbon or stabilized grades.

NOTE Overlays or hard surfaces that contain more than 0,10 % carbon can sensitize both low-carbon and stabilized grades of austenitic stainless steel unless a buffer layer that is not sensitive to intergranular corrosion is applied.

- **5.12.1.8** If specified, the vendor shall furnish material certificates that include chemical analysis and mechanical properties for the heats from which the material is supplied for pressure-containing castings and forgings, impellers and shafts. Unless otherwise specified, piping nipples, auxiliary piping components, and bolting are excluded from this requirement.

- **5.12.1.9** The purchaser shall specify any erosive or corrosive agents (including trace quantities) present in the process fluids and in the site environment, including constituents that may cause stress-corrosion cracking or attack elastomers.

NOTE Typical agents of concern are hydrogen sulfide, amines, chlorides, bromides, iodides, cyanides, fluorides, naphthenic acid and polythionic acid. Other agents affecting elastomer selection include ketones, ethylene oxide, sodium hydroxide, methanol, benzene and solvents.

- **5.12.1.10** If specified, coatings of a type agreed between the purchaser and the vendor shall be applied to impellers and other wetted parts to minimize erosion. If coatings are applied to rotating components, the acceptance balance shall be performed after coatings have been applied. The sequence of procedures for balancing and coating of rotating components shall be agreed. The “remarks” section of the data sheets (see Annex N) should be used for stating these coating requirements.

Rotating parts should be balanced before coating in order to minimize balance corrections to coated areas. By minimizing the area to be recoated, a final check balance after coating repair may not be required.

5.12.1.11 If mating parts such as studs and nuts of austenitic stainless steel or materials with similar galling tendencies are used, they shall be lubricated with an anti-seizure compound compatible with the material(s) and specified process fluid(s).

NOTE The torque loading values required to achieve the necessary preload can vary considerably depending upon the thread lubricant.

- **5.12.1.12** The purchaser shall specify if reduced hardness materials in accordance with NACE MR0175 shall be provided. If reduced hardness materials are specified, ferrous materials not covered by NACE MR0175 shall have a yield strength not exceeding 620 N/mm^2 (90 000 psi) and a hardness not exceeding HRC 22. Components that are fabricated by welding shall be post-weld heat-treated, if required, so that both the welds and the heat-affected zones meet the yield strength and hardness requirements.

The following shall apply.

a) As a minimum, the requirements of 5.12.1.12 apply to the following components:

1) the pressure casing;

2) shafting (including wetted shaft nuts);

3) pressure-retaining mechanical seal components (excluding seal faces);

4) wetted bolting;

5) bowls.

Double-casing pump inner casing parts that are in compression, such as diffusers, are not considered pressure casing parts. In some applications it may be desirable to apply this requirement to impellers.

Copyright American Petroleum Institute
Reproduced by IHS under license with API
Document provided by IHS Licensee=TECNA/5935100001, 11/02/2004 06:04:35 MST
Questions or comments about this message: please call the Document Policy Group

b) Renewable impeller wear rings that must be through-hardened above HRC 22 for proper pump operation shall not be used in sour services. Wear rings may be surface-hardened or coated with a suitable coating. If approved by the purchaser, in lieu of furnishing renewable wear rings, wear surfaces may be surface-hardened or hardened by the application of a suitable coating.

c) The purchaser shall specify the amount of wet H_2S that may be present, considering normal operation, start-up, shutdown, idle standby, upsets, or unusual operating conditions such as catalyst regeneration.

d) Application of NACE MR0175 is a two-step process. First, the need for special materials is determined and, second, the materials are selected. Specification of this clause assumes the purchaser has determined the need, and limited hardness materials shall be supplied.

e) In many applications, small amounts of wet H_2S are sufficient to require materials resistant to sulfide stress-corrosion cracking. If there are trace quantities of wet H_2S known to be present or if there is any uncertainty about the amount of wet H_2S that may be present, the purchaser shall note on the data sheets that materials resistant to sulfide stress-corrosion cracking are required.

5.12.1.13 Steel made to a coarse austenitic grain size practice (such as ASTM A515) shall not be used. Only fully killed or normalized steels made to fine grain practice shall be used.

5.12.1.14 If dissimilar materials with significantly different electrochemical potentials are placed in contact in the presence of an electrolytic solution, galvanic couples can be created that can result in serious corrosion of the less noble material. The vendor shall select materials to avoid conditions that may result in galvanic corrosion. Where such conditions cannot be avoided, the purchaser and the vendor shall agree on the material selection and any other precautions necessary. See NACE Corrosion Engineer's Reference Book [86] for one source for selection of suitable materials in these situations.

5.12.2 Castings

5.12.2.1 Surfaces of castings shall be cleaned by sandblasting, shot blasting, chemical cleaning or any other standard method to meet the visual requirements of MSS-SP-55. Mould-parting fins and remains of gates and risers shall be chipped, filed or ground flush.

5.12.2.2 The use of chaplets in pressure castings shall be held to a minimum. The chaplets shall be clean and corrosion-free (plating is permitted), and of a composition compatible with the casting. Chaplets shall not be used in impeller castings.

5.12.2.3 Ferrous pressure boundary and impeller castings shall not be repaired by welding, peening, plugging, burning in or impregnating, except as specified in a) and b) below.

a) Weldable grades of steel castings may be repaired by welding in accordance with 5.12.3. Weld repairs shall be inspected according to the same quality standard used to inspect the casting.

b) Iron castings may be repaired by plugging within the limits of the applicable material specification. The holes drilled for plugs shall be carefully examined, using liquid penetrant, to ensure that all defective material has been removed. All repairs that are not covered by material specifications shall be subject to the purchaser’s approval.

5.12.2.4 Fully enclosed cored voids, which become fully enclosed by methods such as plugging, welding or assembly, shall not be used.

● **5.12.2.5** If specified, for casting repairs made in the vendor’s shop, repair procedures including weld maps shall be submitted for purchaser’s approval. The purchaser shall specify if approval is required before proceeding with repair. Repairs made at the foundry level shall be controlled by the casting material specification (“producing specification”).

5.12.2.6 Pressure-containing castings of carbon steel shall be furnished in the normalized and tempered condition.

Copyright American Petroleum Institute
Reproduced by IHS under license with API
Document provided by IHS Licensee=TECNA/5935100001, 11/02/2004 06:04:35 MST
Questions or comments about this message: please call the Document Policy Group

5.12.3 Welding

5.12.3.1 Welding and weld repairs shall be performed by operators and in accordance with procedures qualified to the requirements of Table 10. Alternative standards may be proposed by the vendor for the purchaser's approval. The welding and material inspection datasheet in Annex N may be used for this purpose.

Table 10 — Welding requirements

Requirement	Applicable code or standard
Welder/operator qualification	ASME IX or EN 287
Welding procedure qualification	Applicable material specification or, where weld procedures are not covered by the material specification, ASME IX or EN 288
Non-pressure-retaining structural welding such as baseplates or supports	AWS D1.1
Magnetic particle or liquid penetrant examination of the plate edges	ASME VIII, Division 1, UG-93(d)(34)
Post-weld heat-treatment	Applicable material specification or ASME VIII, Division 1, UW 40
Post-weld heat-treatment of casing fabrication welds	Applicable material specification or ASME VIII, Division I

5.12.3.2 The vendor shall be responsible for the review of all repairs and repair welds to ensure they are properly heat-treated and non-destructively examined for soundness and compliance with the applicable qualified procedures (see 5.12.3.1 and 7.2.2.1).

5.12.3.3 Pressure-containing casings made of wrought materials or combinations of wrought and cast materials shall conform to the conditions specified in a) through c) below. These requirements do not apply to casing nozzles and auxiliary connections; see 5.12.3.4.

a) Accessible surfaces of welds shall be inspected by magnetic-particle or liquid-penetrant examination after back chipping or gouging and again after post-weld heat-treatment or, for austenitic stainless steels, after solution annealing.

b) Pressure-containing welds, including welds of the casing to axial-joint and radial-joint flanges, shall be full-penetration welds.

c) If dimensional stability of such a casing component must be assured for the integrity of pump operation, then post-weld heat-treatment shall be performed regardless of thickness.

5.12.3.4 Connections welded to pressure casings shall be installed as specified in a) through e) below.

a) Attachment of suction and discharge nozzles shall be by means of full-fusion, full-penetration welds. Welding neck flanges shall be used for pumps handling flammable or hazardous liquids. Dissimilar metal weldments shall not be used.

b) Auxiliary piping welded to alloy steel casings shall be of a material with the same nominal properties as the casing material or shall be of low carbon austenitic stainless steel. Other materials compatible with the casing material and intended service may be used with the purchaser’s approval.

c) Post-weld heat-treatment, if required, shall be carried out after all welds, including piping welds, have been completed.

Copyright American Petroleum Institute
Reproduced by IHS under license with API
Document provided by IHS Licensee=TECNA/5935100001, 11/02/2004 06:04:35 MST
Questions or comments about this message: please call the Document Policy Group

- d) If specified, proposed connection designs shall be submitted to the purchaser for approval before fabrication. The drawing shall show weld designs, size, materials, and pre-weld and post-weld heat-treatments.

- e) Suction and discharge nozzle welds shall be inspected by magnetic particle or liquid penetrant examination after back chipping or gouging and again after post-weld heat-treatment or, for austenitic stainless steels, after solution annealing. The purchaser shall specify if the following additional examinations shall be performed:

    1) magnetic-particle or liquid-penetrant examination of auxiliary connection welds;

    2) ultrasonic or radiographic examination of any casing welds.

5.12.4 Low temperature service

- **5.12.4.1** The purchaser shall specify the minimum design metal temperature the pump will be subjected to in service. This temperature shall be used to establish impact test requirements. Normally, this will be the lower of the minimum surrounding ambient temperature or minimum liquid pumping temperature. However, the purchaser may specify a minimum design metal temperature based on pump liquid properties, such as autorefrigeration at reduced pressures.

5.12.4.2 To avoid brittle failures, materials of construction for low temperature service shall be suitable for the minimum design metal temperature in accordance with the codes and other requirements specified. The purchaser and the vendor shall agree on any special precautions necessary with regard to conditions that may occur during operation, maintenance, transportation, erection, commissioning and testing.

Good design practice should be followed in the selection of fabrication methods, welding procedures, and materials for vendor-furnished steel pressure-retaining parts that may be subject to temperatures below the ductile-brittle transition temperature. The published design-allowable stresses for metallic materials in internationally recognized standards such as the ASME Code and ANSI standards are based on minimum tensile properties. Some standards do not differentiate between rimmed, semi-killed, fully killed hot-rolled and normalized material, nor do they take into account whether materials were produced under fine- or course-grain practices. The vendor should therefore exercise caution in the selection of materials intended for services between –30 °C (–20 °F) and 40 °C (100 °F).

- **5.12.4.3** The purchaser shall specify whether EN 13445 (all parts) or ASME VIII, Division 1 shall apply with regard to impact-testing requirements.

5.12.4.4 The governing thickness used to determine impact-testing requirements shall be the greater of the following:

a) the nominal thickness of the largest butt-welded joint;

b) the largest nominal section for pressure containment, excluding:

    1) structural support sections, such as feet or lugs;

    2) sections with increased thickness required for rigidity to mitigate shaft deflection;

    3) structural sections required for attachment or inclusion of mechanical features such as jackets or seal chambers;

c) one-fourth of the nominal flange thickness, including parting flange thickness for axially split casings (in recognition that the predominant flange stress is not a membrane stress).

Copyright American Petroleum Institute
Reproduced by IHS under license with API
Document provided by IHS Licensee=TECNA/5935100001, 11/02/2004 06:04:35 MST
Questions or comments about this message: please call the Document Policy Group

5.12.4.5 If ASME VIII, Division I is specified (see 5.12.4.3), the following shall apply:

a) all pressure-retaining steels applied at a specified minimum design metal temperature below –30 °C (–20 °F) shall have a Charpy V-notch impact test of the base metal and the weld joint unless they are exempt in accordance with ASME VIII, Division 1, UHA-51;

b) carbon steel and low alloy steel pressure-retaining parts applied at a specified minimum design metal temperature between –30°C (–20°F) and 40°C (100°F) shall require impact testing as follows.

— Impact testing is not required for parts with a governing thickness of 25 mm (1 in) or less.

— Impact testing exemptions for parts with a governing thickness greater than 25 mm (1 in) shall be established in accordance with paragraph UCS-66 in Section VIII, Division 1 of the ASME Code. Minimum design metal temperature without impact testing may be reduced as shown in Figure UCS-66.1. If the material is not exempt, Charpy V-notch impact test results shall meet the minimum impact energy requirements of paragraph UG-84 of the ASME Code.

5.13 Nameplates and rotation arrows

5.13.1 A nameplate shall be securely attached at a readily visible location on the equipment and on any other major piece of auxiliary equipment.

5.13.2 The nameplate shall be stamped with the following information, in units consistent with the data sheet:

a) purchaser's item number;

b) vendor's size and model number;

c) pump serial number;

d) rated flow;

e) rated head;

f) casing hydrostatic test pressure;

g) speed;

h) manufacturer's bearing identification numbers (if applicable);

i) maximum allowable working pressure (MAWP);

j) temperature basis for MAWP.

5.13.3 In addition to being stamped on the nameplate, the pump serial number shall be plainly and permanently marked on the pump casing.

5.13.4 Rotation arrows shall be cast in or attached to each major item of rotating equipment at a readily visible location.

6 Accessories

6.1 Drivers

● **6.1.1** The purchaser shall specify the type and specification of driver required.

6.1.2 The driver shall

a) be suitable for satisfactory operation under the site conditions specified,

b) be suitable for the specified utility conditions,

Copyright American Petroleum Institute
Reproduced by IHS under license with API
Document provided by IHS Licensee=TECNA/5935100001, 11/02/2004 06:04:35 MST
Questions or comments about this message: please call the Document Policy Group

c) be sized to accommodate all specified process variations such as changes in pressure, temperature or properties of the liquid handled,

d) be sized to accommodate all plant start-up conditions,

e) be sized to meet the maximum specified operating conditions, accounting for all losses (e.g. bearing, mechanical seal, external gear and coupling losses).

6.1.3 Motors shall have power ratings, including the service factor (if any), at least equal to the percentages of power at pump rated conditions given in Table 11. However, the power at rated conditions shall not exceed the motor nameplate rating. If it appears that this procedure will lead to unnecessary oversizing of the motor, an alternative proposal shall be submitted for the purchaser's approval.

Table 11 — Power ratings for motor drives

Motor nameplate rating		Percentage of rated pump power
kW	(hp)	%
< 22	(< 30)	125
22 to 55	(30 to 75)	115
> 55	(> 75)	110

● **6.1.4** The purchaser shall specify the type of motor, its characteristics and the accessories, including the following:

a) electrical characteristics;

b) starting conditions (including the expected voltage drop on starting);

c) type of enclosure;

d) sound pressure level;

e) area classification;

f) type of insulation;

g) required service factor;

h) ambient temperature and elevation above sea level;

i) transmission losses;

j) temperature detectors, vibration sensors and heaters, if these are required;

k) vibration acceptance criteria;

l) applicability of IEC 60034, API 541 or IEEE 841.

6.1.5 The driver's starting-torque capabilities shall exceed the speed-torque requirements of the driven equipment. Unless otherwise specified, the motor shall be capable of accelerating the pump to rated speed at 80 % voltage against a closed discharge valve.

Some pumps are equipped with bypasses, in which case alternative starting conditions should be used.

Copyright American Petroleum Institute
Reproduced by IHS under license with API
Document provided by IHS Licensee=TECNA/5935100001, 11/02/2004 06:04:35 MST
Questions or comments about this message: please call the Document Policy Group

6.1.6 Rolling-element bearings in the drive systems designed for radial or axial loads transmitted from the pump shall meet the following requirements.

a) Bearings shall be selected to give a basic rating life, in accordance with ISO 281, equivalent to at least 25 000 h with continuous operation at pump rated conditions.

b) Bearings shall be selected to give a basic rating life equivalent to at least 16 000 h when carrying the maximum loads (radial or axial or both) imposed with internal pump clearances at twice the design values and when operating at any point between minimum continuous stable flow and rated flow. Vertical motors of 750 kW (1 000 hp) and larger that are equipped with spherical or taper roller bearings may have less than 16 000 h life at worst conditions to avoid skidding in normal operation. In such cases, the vendor shall state the shorter design life in the proposal.

c) For vertical motors and right-angle gears, the thrust bearing shall be in the nondrive end and shall limit axial float to 125 µm (0,005 in).

d) Single-row deep-groove ball bearings shall have radial internal clearance in accordance with ISO 5753 Group 3 [larger than “N” (Normal) internal clearance]. Single- or double-row bearings shall not have filling slots (Conrad type).

NOTE For the purpose of this provision, ABMA 20 Group 3 is equivalent to ISO 5753 Group 3.

e) Thrust bearings shall be designed to carry the maximum thrust the pump may develop while starting, stopping, or operating at any flowrate.

f) Hydrodynamic thrust bearings shall be selected at no more than 50 % of the bearing manufacturer’s rating at twice the pump internal clearances specified in 5.7.4.

6.1.7 Unless otherwise specified, motors for vertical pumps shall have solid shafts. If the pump thrust bearings are in the motor, the motors shall meet the shaft and base tolerances shown in Figure 31.

6.1.8 Unless otherwise specified, steam turbine drivers shall conform to ISO 10436 or API 611. Steam turbine drivers shall be sized to deliver continuously 110 % of the pump rated power at normal steam conditions.

6.1.9 Unless otherwise specified, gears shall conform to API 677.

6.1.10 For drive train components that have a mass greater than 225 kg (500 lb), the equipment feet shall be provided with vertical jackscrews.

Copyright American Petroleum Institute
Reproduced by IHS under license with API
Document provided by IHS Licensee=TECNA/5935100001, 11/02/2004 06:04:35 MST
Questions or comments about this message: please call the Document Policy Group

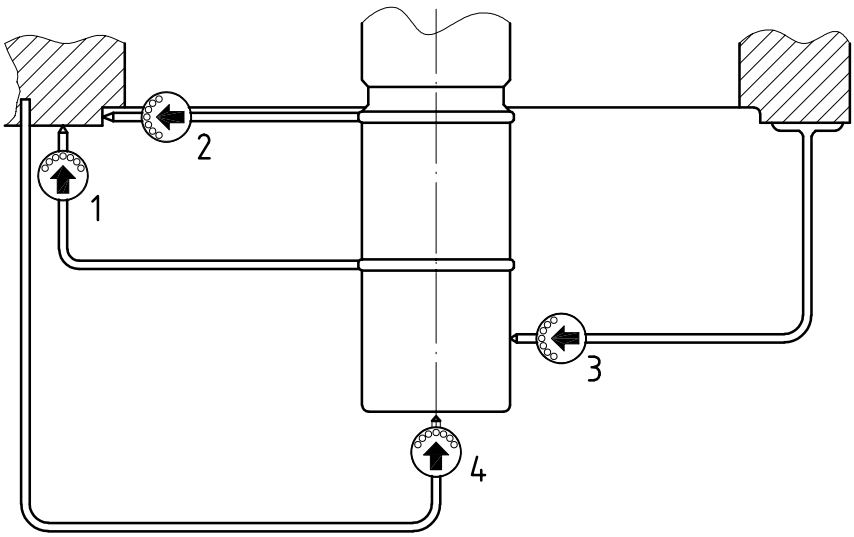

Key

1	shaft-to-driver mating face perpendicularity and surface flatness	25 µm (0,001 in) TIR
2	shaft-to-driver registered maximum runout	100 µm (0,004 in) TIR
3	maximum shaft runout with rotor rotating freely	25 µm (0,001 in) TIR
4	maximum axial float	125 µm (0,005 in) TIR

All measurements shall be taken with the assembled driver in the vertical position.

Figure 31 — Vertically suspended pump drivers — Tolerances required for the driver shaft and base

6.2 Couplings and guards

6.2.1 Couplings and guards between drivers and driven equipment shall be supplied and mounted by the manufacturer of the pump.

6.2.2 All-metal flexible element, spacer-type couplings in accordance with AGMA 9000 Class 9 shall be provided. Additionally, couplings shall comply with the following.

a) Flexible elements shall be of corrosion-resistant material.

b) Couplings shall be designed to retain the spacer if a flexible element ruptures.

c) Coupling hubs shall be steel.

d) The spacer nominal length shall be at least 125 mm (5 in) and shall permit removal of the coupling, bearings, seal and rotor, as applicable, without disturbing the driver or the suction and discharge piping.

e) Couplings operating at speeds in excess of 3 800 r/min shall meet the requirements of ISO 10441 or API 671 for component balancing and assembly balance check.

● **6.2.3** If specified, couplings shall be balanced to ISO 1940-1 grade G6.3.

● **6.2.4** If specified, couplings shall meet the requirements of ISO 14691, ISO 10441 or API 671.

6.2.5 Information on shafts, keyway dimensions (if any), and shaft end movements due to end play and thermal effects shall be furnished to the vendor supplying the coupling.

6.2.6 Unless a proprietary clamping device is specified (see 6.2.11), flexible couplings shall be keyed to the shaft. Keys, keyways and fits shall conform to AGMA 9002, Commercial Class.

Copyright American Petroleum Institute
Reproduced by IHS under license with API
Document provided by IHS Licensee=TECNA/5935100001, 11/02/2004 06:04:35 MST
Questions or comments about this message: please call the Document Policy Group

6.2.7 Couplings and coupling to shaft junctures shall be rated for at least the maximum driver power, including the service factor.

6.2.8 For shaft diameters greater than 60 mm (2,5 in) and if it is necessary to remove the coupling hub to service the mechanical seal, the hub shall be mounted with a taper fit. The coupling fit taper for keyed couplings shall be 1 in 16 [60 mm/m (0,75 in/ft), diametral]. Other mounting methods and tapers shall be agreed upon by the purchaser and the vendor. Coupling hubs with cylindrical bores may be supplied with slip fits to the shaft and set screws that bear on the key.

Appropriate assembly and maintenance procedures should be used to assure that taper fit couplings have an interference fit. Slip fits on cylindrical bores allow adjustment of the coupling axial position in the field without application of heat.

6.2.9 Coupling hubs designed for interference fits to the shaft shall be furnished with tapped puller holes at least 10 mm (0,38 in) in diameter to aid in removal.

- **6.2.10** If specified, couplings shall be fitted hydraulically.

- **6.2.11** If specified, couplings shall be fitted with a proprietary clamping device. Acceptable clamping devices may include tapered bushes, frictional locking assemblies and shrink discs. The vendor responsible for the final machining of the hub bores shall select a suitable rating/size device to suit the coupling and the application.

  Care should be exercised in the selection of these devices, as some are not inherently self-centring and may introduce eccentricity and unbalance into the coupling assembly. This effect shall be evaluated and allowed for when determining coupling potential unbalance.

6.2.12 Provision shall be made for the attachment of alignment equipment without the need to remove the spacer or dismantle the coupling in any way.

NOTE One way of achieving this is to provide at least 25 mm (1 in) of bare shaft between the coupling hub and the bearing housing where alignment brackets may be located.

6.2.13 If the vendor is not required to mount the driver, the fully machined half-coupling shall be delivered to the driver manufacturer's plant or any other designated location, together with the necessary instructions for mounting the half-coupling on the driver shaft.

6.2.14 Each coupling shall have a coupling guard which is removable without disturbing the coupled elements and shall meet the following requirements.

- a) Coupling guards shall enclose the coupling and the shafts to prevent personnel from contacting moving parts during operation of equipment train. Allowable access dimensions shall comply with specified standards, such as ISO 14120, EN 953 or ASME B15.1.

  b) Guards shall be constructed with sufficient rigidity to withstand a 900 N (200 lbf) static point load in any direction without the guard contacting moving parts.

- c) Guards shall be fabricated from solid sheet or plate with no openings. Guards fabricated from expanded metal or perforated sheets may be used if the size of the openings does not exceed 10 mm (0,375 in). Guards shall be constructed of steel, brass or non-metallic (polymer) materials. Guards of woven wire shall not be used. If specified, non-sparking guards of agreed material shall be supplied.

6.3 Baseplates

6.3.1 Single-piece drain-rim or drain-pan baseplates shall be furnished for horizontal pumps. The rim or pan of the baseplate shall be sloped at least 1 in 120 toward the pump end, where a tapped drain opening of at least DN 50 (2 NPS) shall be located to effect complete drainage.

Copyright American Petroleum Institute
Reproduced by IHS under license with API
Document provided by IHS Licensee=TECNA/5935100001, 11/02/2004 06:04:35 MST
Questions or comments about this message: please call the Document Policy Group

6.3.2 The baseplate shall extend under the pump and drive train components so that any leakage is contained within the baseplate. To minimize accidental damage to components, all pipe joints and pipe flange faces, including pump suction and discharge flanges, shall be within the drain-pan or drain-rim collection area. All other projections of the equipment supplied shall fall within the maximum perimeter of the baseplate. Oversized junction boxes may overhang the perimeter of the baseplate with the purchaser's approval.

● **6.3.3** Mounting pads shall be provided for the pump and all drive train components, such as motors and gears. The pads shall be larger than the foot of the mounted equipment to allow levelling of the baseplate without removal of the equipment. The pads shall be fully machined flat and parallel. Corresponding surfaces shall be in the same plane within 150 µm/m (0,002 in/ft) of distance between the pads. If specified, this requirement shall be demonstrated in the pump-vendor's shop prior to mounting of the equipment and with the baseplate supported and clamped at the foundation bolt holes only.

Installed baseplate flatness can be affected by transportation, handling and installation procedures beyond the vendor's scope. Installation practices in API RP 686 should be followed.

6.3.4 Shims shall not be used under the pump. All pads for drive train components shall be machined to allow for the installation of shims at least 3 mm (0,12 in) thick under each component. If the vendor mounts the components, a set of stainless steel shims at least 3 mm (0,12 in) thick shall be furnished. Shim packs shall not be thicker than 13 mm (0,5 in) nor contain more than 5 shims. All shim packs shall straddle the hold-down bolts and vertical jackscrews, and extend at least 5 mm (1/4 in) beyond the outer edges of the equipment feet. If the vendor does not mount the components, the pads shall not be drilled and shims shall not be provided.

6.3.5 To minimize misalignment of the pump and driver shafts due to piping load effects, the pump and its baseplate shall be constructed with sufficient structural stiffness to limit displacement of the pump shaft at the drive end of the shaft or at the register fit of the coupling hub to the values shown in Table 12 during a test in accordance with 6.3.6. Grout shall not be used as a means of obtaining the required stiffness.

It is recognized that grout can significantly increase the stiffness of the baseplate assembly; by neglecting this effect, the adequacy of the baseplate can easily be verified at the vendor's shop.

● **6.3.6** If specified, the vendor shall test to demonstrate that the pump and its baseplate assembly, anchored at foundation bolt hole locations, are in compliance with 6.3.5. The pump casing shall be subjected to moments M_{Yc} and M_{Zc} applied to either nozzle, but not both, such that the corresponding shaft displacements can be measured and recorded. M_{Yc} and M_{Zc} shall not be applied simultaneously to either nozzle. The shaft displacement measurements shall be absolute (not relative to the baseplate). For record purposes, the vendor's test data shall include a schematic drawing of test set-up, the calculated moment loads (M_{Yc} and M_{Zc}), and the applied moment loads and their corresponding displacements at the drive end of the pump shaft.

6.3.7 The underside of fabricated baseplates beneath pump and driver supports shall be welded to reinforcing cross-members, and the members shall be shaped to lock positively into the grout.

Table 12 — Stiffness test acceptance criteria

Baseplate intended for grouting		Baseplate not intended for grouting	
Loading condition	**Pump shaft displacement** µm (in)	**Pump shaft displacement** µm (in)	**Direction**
M_{Yc}	175 (0,007)	125 (0,005)	+ Z
M_{Zc}	75 (0,003)	50 (0,002)	– Y

M_{Yc} and M_{Zc} equal the sum of the allowable suction and discharge nozzle moments from Table 4.

$M_{Yc} = (M_Y)_{suction} + (M_Y)_{discharge}$

$M_{Zc} = (M_Z)_{suction} + (M_Z)_{discharge}$

Copyright American Petroleum Institute
Reproduced by IHS under license with API
Document provided by IHS Licensee=TECNA/5935100001, 11/02/2004 06:04:35 MST
Questions or comments about this message: please call the Document Policy Group

6.3.8 All joints, including deck plate to structural members, shall be continuously seal-welded to prevent crevice corrosion. Stitch welding, top or bottom, is unacceptable.

6.3.9 All baseplates shall be provided with at least one grout hole having a clear area of at least 125 cm^2 (19 in^2) and no dimension less than 75 mm (3 in) in each bulkhead section. These holes shall be located to permit filling the entire cavity under the baseplate without creating air pockets. If practical, the holes shall be accessible for grouting with the pump and driver installed on the baseplate. Grout holes in the drip pan area shall have 13 mm (0,5 in) raised lip edges. If the holes are located in an area where liquids could impinge on the exposed grout, metallic covers with a minimum thickness of 1,5 mm (0,06 in, 16 gauge) shall be provided. Vent holes at least 13 mm (0,5 in) in diameter shall be provided at the highest point in each bulkhead section of the baseplate

6.3.10 The outside corners of the baseplate in contact with the grout shall have at least 50 mm (2 in) radii in the plan view (see Figure D.1, Annex D).

6.3.11 The bottom of the baseplate between structural members shall be open if the baseplate is designed to be installed and grouted to a concrete foundation. Accessibility shall be provided for grouting under all load-carrying members. The bottom of the baseplate shall be in one plane to permit use of a single level foundation.

6.3.12 If driver and pump size permit, baseplates shall have standardized dimensions as given in Annex D and shall be designed for grouting. These baseplates shall be referred to as “Standard Baseplates, Numbers 0,5 to 12.”

6.3.13 If specified, the baseplate and pedestal support assembly shall be sufficiently rigid to be mounted without grouting.

6.3.14 Transverse and axial alignment positioning jackscrews shall be provided for drive train components having a mass greater than 250 kg (500 lb) to facilitate transverse horizontal and longitudinal adjustments. The lugs holding these positioning screws shall be attached to the baseplate so that the lugs do not interfere with the installation or removal of the component. These screws shall be at least M12 (1/2”-13). To prevent distortion, machining of mounting pads shall be deferred until welding on the baseplate in close proximity to the mounting pads has been completed.

6.3.15 Vertical levelling screws spaced for stability shall be provided on the outside perimeter of the baseplate. They shall be located adjacent to anchor bolts to minimize distortion during the process of installation. These screws shall be numerous enough to carry the weight of the baseplate, pump, and drive train components without excessive deflection, but in no case shall fewer than six screws be provided.

6.3.16 The height of the pump shaft centreline above the baseplate shall be minimized. Adequate clearance shall be provided between the casing drain connection and the baseplate so that drain piping the same size as the connection can be installed without the use of a street (male-female) elbow.

6.3.17 The vendor shall commercially sand-blast, in accordance with ISO 8501 Grade Sa2 or SSPC SP 6, all grout contact surfaces of the baseplate, and coat those surfaces with a primer compatible with epoxy grout.

Grouts other than epoxy may require alternative surface preparation. Full bond-strength of epoxy is not generally necessary (6.3.7).

6.3.18 The baseplate shall be provided with lifting lugs for at least a four-point lift. Lifting the baseplate, complete with all equipment mounted, shall not permanently distort or otherwise damage the baseplate or the machinery mounted on it.

6.3.19 Anchor bolts are in the purchaser’s scope. The vendor shall provide for sufficient anchor bolting to withstand nozzle reaction forces during pump start-up and operation.

6.3.20 Lifting lugs attached to the equipment shall be designed using a maximum allowable stress of one-third of the specified minimum yield strength of the material.

Copyright American Petroleum Institute
Reproduced by IHS under license with API
Document provided by IHS Licensee=TECNA/5935100001, 11/02/2004 06:04:35 MST
Questions or comments about this message: please call the Document Policy Group

6.4 Instrumentation

6.4.1 Gauges

If furnished, temperature indicators and pressure gauges shall be in accordance with ISO 10438.

NOTE For the purpose of this provision, API 614 is equivalent to ISO 10438.

6.4.2 Vibration, position and temperature detectors

● **6.4.2.1** If specified, accelerometers shall be supplied, installed and tested in accordance with API 670.

● **6.4.2.2** If specified for equipment with hydrodynamic bearings, provision shall be made for mounting two radial vibration probes in each bearing housing, two axial position probes at the thrust end of each machine, and a one-event-per-revolution probe in each machine. The purchaser shall specify whether the vendor is to supply these detectors. The detectors and their mounting and calibration shall be supplied, installed and tested in accordance with API 670.

● **6.4.2.3** If specified, hydrodynamic thrust and radial bearings shall be fitted with bearing metal temperature detectors. If pressure-lubricated hydrodynamic thrust and radial bearings are supplied with temperature detectors, the detectors and their mounting and calibration shall be supplied, installed and tested in accordance with API 670.

● **6.4.2.4** If specified, monitors with connecting cables to vibration, axial position or temperature detectors shall be supplied and/or installed in accordance with API 670.

6.5 Piping and appurtenances

6.5.1 General

6.5.1.1 Piping shall be in accordance with ISO 10438.

6.5.1.2 Auxiliary systems are defined as piping systems that are in the following services:

a) auxiliary process fluids;

b) steam;

c) cooling water;

d) lubricating oil (see 8.2.6).

Auxiliary system materials shall be in accordance with Annex H, Table H.5.

NOTE Auxiliary connections are discussed in 5.4.3.

6.5.1.3 The piping systems shall be fully assembled and installed. If this requirement causes difficulty in shipping and handling, alternative arrangements are acceptable with purchaser approval.

● **6.5.1.4** If specified, barrier/buffer fluid reservoirs shall be designed for mounting off the pump baseplate and shall be shipped separately. These reservoirs shall be fully assembled, except that the fluid-circulation tubing shall not be supplied.

6.5.1.5 The vendor shall furnish and locate all piping systems, including mounted appurtenances, within the confines of the baseplate.

● **6.5.1.6** If specified, each piping system shall be manifolded to a single purchaser's inlet or outlet connection near the edge and within the confines of the baseplate.

--`,`,`,`,`,```,,,`,,,`,,,,,`,,,`-`-`,,`,`,`,`,`---
Copyright American Petroleum Institute
Reproduced by IHS under license with API
Document provided by IHS Licensee=TECNA/5935100001, 11/02/2004 06:04:35 MST
Questions or comments about this message: please call the Document Policy Group

NOTE The datasheet allows selection of this option for vent, cooling water and drain connections.

- **6.5.1.7** The bolting requirements of 5.1.31 apply to the connection of auxiliary piping to the equipment. Flange fasteners on stainless steel piping systems in lubricating oil service need not be stainless steel unless specified. If the purchaser does not specify stainless steel fasteners, they shall be low alloy steel (e.g. ASTM A193 Grade B7) and the purchaser shall specify whether they shall be coated (such as by PTFE coating or galvanizing in accordance with ASTM A153) or painted.

6.5.1.8 Plugs shall comply with 5.4.3.7.

6.5.2 Auxiliary process fluid piping

6.5.2.1 Auxiliary process-fluid piping includes vent lines, drain lines, balance lines, product flushing lines, and lines for injection of external fluid.

6.5.2.2 Piping components shall have a pressure-temperature rating at least equal to MAWP of the pump casing, but in no case less than ISO 7005 PN50 (ASME Class 300) flange at ambient temperature (5.3.5).

6.5.2.3 Piping and components subject to the process fluid shall have a corrosion/erosion resistance equal to or better than that of the casing. Otherwise, all components shall be steel.

- **6.5.2.4** The purchaser shall specify if chlorides are present in the pumped fluid in a concentration above 10 mg/kg (parts per million by weight). Caution should then be used if applying stainless steel.

6.5.2.5 Orifice openings shall not be less than 3 mm (0,12 in) in diameter.

6.5.2.6 Unless valves are specified, threaded vent and drain connections shall be plugged. Carbon steel plugs shall be used with cast iron casings.

6.5.2.7 If heating or cooling is provided, each exchanger component shall be suitable for the process fluid and cooling water to which it is exposed.

- **6.5.2.8** In addition to the requirements of 6.5.2.1 through 6.5.2.7 above, for piping containing flammable or hazardous fluids, the purchaser shall specify where flanges are required in place of socket-welded unions.

6.5.3 Cooling-water piping

6.5.3.1 The arrangement of cooling-water piping shall conform to Figures B.2 to B.9, as applicable.

6.5.3.2 The cooling-water piping shall be designed for the conditions in 5.1.22.

6.5.3.3 Sight flow indicators shall be furnished in each outlet line.

6.5.3.4 Unless otherwise specified, valves shall be furnished on all manifolded inlet and outlet connections.

6.6 Special tools

6.6.1 If special tools and fixtures are required to disassemble, assemble, or maintain the unit, they shall be included in the quotation and furnished as part of the initial supply of the machine. For multiple unit installations, the requirements for quantities of special tools and fixtures shall be agreed upon by the purchaser and the vendor. These or similar special tools shall be used during shop assembly and post-test disassembly of the equipment.

6.6.2 If special tools are provided, they shall be packaged in separate, rugged metal boxes and marked “special tools for (tag/item number)”. Each tool shall be stamped or tagged to indicate its intended use.

Copyright American Petroleum Institute
Reproduced by IHS under license with API
Document provided by IHS Licensee=TECNA/5935100001, 11/02/2004 06:04:35 MST
Questions or comments about this message: please call the Document Policy Group

7 Inspection, testing, and preparation for shipment

7.1 General

7.1.1 After advance notification to the vendor by the purchaser, the purchaser's representative shall have entry to all vendor and subvendor plants where manufacturing, testing, or inspection of the equipment is in progress.

7.1.2 The vendor shall notify subvendors of the purchaser's inspection and testing requirements.

7.1.3 The vendor shall provide sufficient advance notice to the purchaser before conducting any inspection or test that the purchaser has specified to be witnessed or observed.

● **7.1.4** The purchaser shall specify the extent of his participation in the inspection and testing.

a) If shop inspection and testing have been specified, the purchaser and the vendor shall coordinate manufacturing hold points and inspector's visits.

b) The expected dates of testing shall be communicated at least 30 days in advance and the actual dates confirmed as agreed. Unless otherwise agreed, the vendor shall give at least five working days advanced notification of a witnessed or observed inspection or test.

For smaller pumps where set-up and test time is short, five days notice may require the pump to be removed from the test stand between preliminary and witness tests.

All witnessed inspections and tests are hold points. For observed tests, the purchaser should expect to be in the factory longer than for a witnessed test.

c) If specified, witnessed mechanical and performance tests shall require a written notification of a successful preliminary test. The vendor and purchaser shall agree if the machine test set-up is to be maintained or if the machine can be removed from the test stand between the preliminary and witnessed tests.

Many purchasers prefer not to have preliminary tests prior to witnessed tests, in order to understand any difficulties encountered during testing. If this is the case, purchasers should make it clear to the vendor.

7.1.5 Equipment, materials and utilities for the specified inspections and tests shall be provided by the vendor.

● **7.1.6** If specified, the purchaser's representative, the vendor's representative, or both, shall indicate compliance in accordance with an inspector's checklist such as that provided in Annex E by initialling, dating and submitting the completed checklist to the purchaser before shipment.

7.1.7 The purchaser's representative shall have access to the vendor's quality program for review.

7.2 Inspection

7.2.1 General

● **7.2.1.1** The vendor shall keep the following data available for at least 20 years:

a) necessary or specified certification of materials, such as mill test reports;

b) test data and results to verify that the requirements of the specification have been met;

c) if specified, details of all repairs and records of all heat-treatment performed as part of a repair procedure;

d) results of quality control tests and inspections;

Copyright American Petroleum Institute
Reproduced by IHS under license with API
Document provided by IHS Licensee=TECNA/5935100001, 11/02/2004 06:04:35 MST
Questions or comments about this message: please call the Document Policy Group

e) as-built running clearances;

f) other data specified by the purchaser or required by applicable codes and regulations (see 9.3.1 and 9.3.2).

7.2.1.2 Pressure-containing parts shall not be painted until the specified inspection and testing of the parts is complete.

7.2.1.3 In addition to the requirements of 5.12.1.5 the purchaser may specify the following:

a) parts that shall be subjected to surface and subsurface examinations;

b) the type of examination required, such as magnetic particle, liquid penetrant, radiographic and ultrasonic examinations.

7.2.1.4 All preliminary running tests and mechanical checks shall be completed by the vendor before the purchaser's inspection.

7.2.2 Materials inspection

7.2.2.1 NDE shall be performed as required by the material specification. If additional radiographic, ultrasonic, magnetic-particle or liquid-penetrant examination of the welds or materials is specified by the purchaser, the methods and acceptance criteria shall be in accordance with the standards shown in Table 13. Alternative standards may be proposed by the vendor or specified by the purchaser. The welding and material inspection data sheet in Annex N may be used for this purpose.

7.2.2.2 If specified, the purchaser may inspect for cleanliness of the equipment and all piping and appurtenances furnished by or through the vendor before assembly.

7.2.2.3 If specified, the hardness of parts, welds and heat-affected zones shall be verified as being within the allowable values by testing. The method, extent, documentation and witnessing of the testing shall be agreed upon by the purchaser and the vendor.

Table 13 — Materials inspection standards

Type of inspection	Methods	Acceptance criteria	
		For fabrications	For castings
Radiography	Section V, Articles 2 and 22 of the ASME Code	Section VIII , Division 1, UW-51 (for 100 % radiography) and UW-52 (for spot radiography) of the ASME Code	Section VIII, Division 1, Appendix 7 of the ASME Code
Ultrasonic inspection	Section V, Articles 5 and 23 of the ASME Code	Section VIII, Division 1, Appendix 12, of the ASME Code	Section VIII, Division 1, Appendix 7, of the ASME Code
Magnetic particle inspection	Section V, Articles 7 and 25 of the ASME Code	Section VIII, Division 1, Appendix 6 of the ASME Code	Section VIII, Division 1, Appendix 7, of the ASME Code
Liquid penetrant inspection	Section V, Articles 6 and 24 of the ASME Code	Section VIII, Division 1, Appendix 8 of the ASME Code	Section VIII, Division 1, Appendix 7, of the ASME Code

Copyright American Petroleum Institute
Reproduced by IHS under license with API
Document provided by IHS Licensee=TECNA/5935100001, 11/02/2004 06:04:35 MST
Questions or comments about this message: please call the Document Policy Group

7.3 Testing

7.3.1 General

7.3.1.1 Performance and NPSH tests shall be conducted using the methods of ISO 9906 grade 1, HI 1.6 (for centrifugal pumps) or HI 2.6 (for vertical pumps), except that efficiency shall be for information only and not rating. Performance tolerances shall be in accordance with Table 14.

● **7.3.1.2** If specified, at least 6 weeks before the first scheduled running test, the vendor shall submit to the purchaser, for his review and comment, detailed procedures for all running tests and all specified optional tests (7.3.4), including acceptance criteria for all monitored parameters.

7.3.1.3 Mechanical seals shall not be used during the hydrostatic test but shall be used during all running or performance tests.

7.3.2 Hydrostatic test

7.3.2.1 All pressure-casing components shall be hydrostatically tested with liquid at a minimum of 1,5 times the maximum allowable working pressure, with the special provisions specified below.

a) Double-casing pumps, horizontal multistage pumps, integral-gear pumps (as described in 5.3.6), and other special design pumps as approved by the purchaser may be segmentally tested.

b) Cooling passages and components, including jackets for bearings, seal chambers, oil coolers and seal coolers, shall be tested at a minimum gauge pressure of 1 000 kPa (10 bar) (150 psi).

c) Steam, cooling-water and lubricating-oil piping, if fabricated by welding, shall be tested at 1,5 times maximum operating gauge pressure or 1 000 kPa (10 bar) (150 psi), whichever is greater.

d) The test liquid shall be at a temperature higher than the nil-ductility transition temperature of the material being tested.

e) Gaskets used during hydrostatic testing of an assembled pressure casing, less seal glands, shall be of the same design as those to be supplied with the pump.

f) Hydrotesting is permitted without the seal gland plate or seal chamber installed. If a cast material gland plate or seal chamber is used, it shall be separately hydrotested to the same pressure requirements as the pressure casing.

Table 14 — Performance tolerances

Condition	Rated point %	Shutoff %
Rated differential head:		
— 0 m to 150 m (0 ft to 500 ft)	– 2 + 5	+ 10 – 10 [a]
— 151 m to 300 m (501 ft to 1 000 ft)	– 2 + 3	+ 8 – 8 [a]
— > 300 m (1 000 ft)	– 2 + 2	+ 5 – 5 [a]
Rated power	+ 4 [b]	—
Rated NPSH	0	—

NOTE Efficiency is not a rating value.

[a] If a rising head flow curve is specified (see 5.1.13), the negative tolerance specified here shall be allowed only if the test curve still shows a rising characteristic.

[b] Under any combination of the above (cumulative tolerances are not acceptable)

Copyright American Petroleum Institute
Reproduced by IHS under license with API
Document provided by IHS Licensee=TECNA/5935100001, 11/02/2004 06:04:35 MST
Questions or comments about this message: please call the Document Policy Group

7.3.2.2 If the part tested is to operate at a temperature at which the strength of a material is below the strength of that material at the testing temperature, the hydrostatic test pressure shall be multiplied by a factor obtained by dividing the allowable working stress for the material at the testing temperature by that at the rated operating temperature. The stress values used shall be determined in accordance with 5.3.4. For piping, the stress shall conform to ISO 15649. The pressure thus obtained shall then be the minimum pressure at which the hydrostatic test shall be performed. The data sheets shall list actual hydrostatic test pressures.

NOTE For the purpose of this provision, ASME B31.3 is equivalent to ISO 15649.

7.3.2.3 The chloride content of liquids used to test austenitic stainless steel materials shall not exceed 50 mg/kg. To prevent deposition of chlorides as a result of evaporative drying, all residual liquid shall be removed from tested parts at the conclusion of the test.

NOTE Chloride content is limited in order to prevent stress-corrosion cracking.

7.3.2.4 Tests shall be maintained for a sufficient period of time to permit complete examination of parts under pressure. The hydrostatic test shall be considered satisfactory if neither leaks nor seepage through the pressure-containing parts are observed for at least 30 min. Large, heavy pressure-containing parts may require a longer testing period to be agreed upon by the purchaser and the vendor. Seepage past internal closures required for testing of segmented cases and operation of a test pump to maintain pressure are acceptable. Piping systems fabricated by welding shall be hydrotested in accordance with ISO 15649. Gaskets used during hydrotest of an assembled casing shall be of the same design as those supplied with the casing.

NOTE For the purpose of this provision, ASME B31.3 is equivalent to ISO 15649.

7.3.2.5 The hydrostatic test liquid shall include a wetting agent to reduce surface tension if one or more of the following conditions exists.

a) The liquid pumped has a relative density (specific gravity) of less than 0,7 at the pumping temperature.

b) The pumping temperature is higher than 260 °C (500 °F).

c) The casing is cast from a new or altered pattern.

d) The materials are known to have poor castability.

7.3.2.6 Austenitic or duplex stainless steel pressure-casing components may be hydrostatically tested with an additional amount of material on areas where machining to critical dimensions and tolerances is required. The additional amount of material shall not exceed 1 mm (0,040 in) material stock or 5 % of minimum allowable wall thickness, whichever is less.

Any areas which are machined after hydrostatic testing shall be identified on the hydrotest report.

NOTE Because of the residual stresses resulting from final liquid quenching and relatively low proportional limits inherent in these materials, small amounts of permanent deformation can occur at critical dimensions during hydrostatic testing. By allowing a small amount of material to remain at these critical areas during hydrostatic testing, the need to add material by welding to restore close-toleranced dimensions after hydrotest is avoided.

7.3.3 Performance test

7.3.3.1 Unless otherwise specified, each pump shall be given a performance test. Performance tests shall be performed using water at a temperature less than 65 °C (150 °F).

● **7.3.3.2** The requirements of a) through h) below shall be met while the pump is operating on the test stand and before the performance test is performed.

a) The contract seals and bearings shall be used in the pump for the performance test.

b) If approved by the purchaser, substitute seals may be used during the performance test if needed to prevent damage to the contract seals or if the contract seals are not compatible with the test fluid.

Copyright American Petroleum Institute
Reproduced by IHS under license with API
Document provided by IHS Licensee=TECNA/5935100001, 11/02/2004 06:04:35 MST
Questions or comments about this message: please call the Document Policy Group

c) The seal (or seals) shall not have a leakage rate during any phase of the pump performance test that is in excess of that specified in ISO 21049 or as otherwise agreed by the vendor and purchaser. Any unacceptable leakage during the pump performance test requires a disassembly and repair to the seal. If the seal is disassembled or removed, the seal shall be retested with an air test of the pump using the criteria defined in 7.3.3.5 d).

When the pump is on the test stand and water is used as the test fluid, liquid seals suitable for testing on water shall exhibit no visible signs of leakage. ISO 21049:2004, Annex A.1.3, should be reviewed to confirm that a zero-visible-leakage criterion is appropriate for the seals being tested.

NOTE For the purpose of this provision, API 682 is equivalent to ISO 21049.

d) If specified, seal leakage during test shall require the assembled pump and seal to be rerun to demonstrate satisfactory seal performance.

e) All lubricating oil pressures, viscosities and temperatures shall be within the range of operating values recommended in the vendor's operating instructions for the specified unit being tested.

f) Bearings specified to be normally lubricated from a pure oil-mist system shall be prelubricated prior to performance testing using a suitable hydrocarbon oil.

g) All joints and connections shall be checked for tightness, and any leaks shall be corrected.

h) All warning, protective and control devices used during the test shall be checked and adjusted as required.

● **7.3.3.3** Unless otherwise specified, the performance test shall be conducted as specified in a) through d) below.

a) The vendor shall take test data, including head, flowrate, power, appropriate bearing temperature(s) and vibration at a minimum of five points. These points will normally be

1) shutoff (no vibration data required),

2) minimum continuous stable flow,

3) midway between minimum and rated flow,

4) rated flow, and

5) maximum allowable flow (as a minimum, 120 % of BEP).

b) The test point for rated flow shall be within a tolerance band of ± 5 % of rated flow.

In the case of high-energy pumps (see 5.1.18), integral-gear and multistage pumps, it may not be feasible to test at shutoff. Some low specific-speed pumps cannot achieve 120 % BEP flow.

c) Unless otherwise agreed, the test speed shall be within 3 % of the rated speed shown on the pump data sheet (see example in Annex N). Test results shall be converted to anticipated results at the rated speed.

d) The vendor shall maintain a complete, detailed log of all final tests and shall prepare the required number of copies, certified for correctness. Data shall include test curves and a summary of test performance data compared to guarantee points (see 9.2.4, 9.3.2.2 and example in Annex M).

e) If specified, in addition to formal submittal of final data in accordance with 9.3.2.2, curves and test data (corrected for speed, specific gravity and viscosity) shall be submitted within 24 h after completion of performance testing for purchaser's engineering review and acceptance prior to shipment.

Copyright American Petroleum Institute
Reproduced by IHS under license with API
Document provided by IHS Licensee=TECNA/5935100001, 11/02/2004 06:04:35 MST
Questions or comments about this message: please call the Document Policy Group

- **7.3.3.4** During the performance test, the requirements of a) through d) below shall be met.

  a) Vibration values shall be recorded during the test in accordance with 5.9.3.2. Vibration values shall not exceed those given in 5.9.3.6.

  b) Pumps shall operate within bearing temperature limits as defined in 5.10.2.4 and shall not display signs of unfavourable operation, such as noise caused by cavitation.

  c) When operated at rated speed, pumps shall perform within the tolerances given in Table 14.

  d) If specified, true peak bearing-housing velocities shall also be recorded for information only.

- **7.3.3.5** The requirements of a) through d) below shall be met after the performance test is completed.

  a) If it is necessary to dismantle a pump after the performance test for the sole purpose of machining impellers to meet the tolerances for differential head, no retest is required unless the reduction in diameter exceeds 5 % of the original diameter. The diameter of the impeller at the time of shop test, as well as the final diameter of the impeller, shall be recorded on a certified shop test curve that shows the operating characteristics after the diameter of the impeller has been reduced.

  b) If specified, disassembly of multistage pumps for any head adjustment (including less than 5 % diameter change) after test, shall be cause for retest.

  c) If it is necessary to dismantle a pump for any other correction, such as improvement of power, NPSH or mechanical operation, the initial test shall not be acceptable, and the final performance test shall be run after the correction is made.

  d) If it is necessary to disturb the mechanical seal assembly following the performance test, or if the test seal faces are replaced with the job seal faces, the final seal assembly shall be air-tested as follows:

     1) pressurize each sealing section independently with clean air to a test gauge pressure of 175 kPa (1,75 bar) (25 psi);

     2) isolate the test set-up from the pressurizing source and maintain the pressure for a minimum of 5 min, or 5 min per 30 l (1 ft^3) of test volume, whichever is greater;

     3) the maximum allowable pressure drop during the test shall be 15 kPa (0,15 bar) (2 psi).

7.3.4 Optional tests

7.3.4.1 General

- If specified, the shop tests described in 7.3.4.2 through 7.3.4.6 shall be performed. Test details shall be agreed upon by the purchaser and the vendor.

7.3.4.2 NPSHR test

- **7.3.4.2.1** If specified, NPSHR shall be determined at each test point [7.3.3.3 a)] except shut-off.

7.3.4.2.2 A 3 % drop in head (first stage head on multistage pumps) shall be interpreted as indicating performance impairment. The first stage head of pumps with two or more stages shall be measured using a separate connection to the first stage discharge if possible. If this is not feasible, testing of the first stage only should be considered.

7.3.4.2.3 NPSHR at the rated point shall not exceed the quoted value (see Table 14). Dismantling to correct NPSHR requires a retest (see 7.3.3.5 and 7.4.3.1).

--`,`,`,`,`,``,,,`,,,`,,,,,`,,-`-`,,`,,`,`,`,,`---

Copyright American Petroleum Institute
Reproduced by IHS under license with API
Document provided by IHS Licensee=TECNA/5935100001, 11/02/2004 06:04:35 MST
Questions or comments about this message: please call the Document Policy Group

7.3.4.3 Complete unit test

- If specified, the pump and driver train, complete with all auxiliaries that make up the unit, shall be tested together. If specified, torsional vibration measurements shall be made to verify the vendor's analysis. The complete-unit test shall be performed in place of or in addition to separate tests of individual components specified by the purchaser.

7.3.4.4 Sound level test

- If specified, sound level tests shall be performed as agreed between the purchaser and the vendor.

NOTE ISO 3740, ISO 3744, and ISO 3746 may be consulted for guidance.

7.3.4.5 Auxiliary equipment test

- If specified, auxiliary equipment such as oil systems, gears and control systems shall be tested in the vendor's shop. Details of the auxiliary equipment test(s) shall be developed jointly by the purchaser and the vendor.

7.3.4.6 Bearing housing resonance test

- If a resonance test is specified, the bearing housing(s) shall be excited by impact or other suitable means with the pump unpiped, and the natural frequency(ies) shall be determined from the response. A separation margin shall exist between the natural frequency(ies) and the following excitation frequencies:

  a) multiples of running speed (r/min): 1,0; 2,0; 3,0;

  b) multiples of vane passing frequency: 1,0; 2,0.

  Test acceptance criteria shall be agreed upon between the purchaser and the vendor.

7.3.4.7 Mechanical run test

- **7.3.4.7.1** If specified, the pump shall be run on the test stand until oil temperature stabilization (5.10.2.4) has been achieved.

- **7.3.4.7.2** If specified, the pump shall be mechanically run for 4 h. Unless otherwise specified or agreed, this run shall be performed at rated flow.

- **7.3.4.7.3** If specified, the beginning of the mechanical run test shall not occur until oil temperatures have stabilized.

7.4 Preparation for shipment

- **7.4.1** The purchaser shall specify the type of shipment and storage required. Rotors shall be blocked if necessary. Blocked rotors shall be identified by means of corrosion-resistant tags attached with stainless steel wire. The preparation shall make the equipment suitable for at least 6 months of outdoor storage from the time of shipment, with no disassembly required before operation, except for inspection of bearings and seals. If storage for a longer period is contemplated, the purchase shall consult with the vendor regarding the recommended procedures to be followed.

  7.4.2 The vendor shall provide the purchaser with the instructions necessary to preserve the integrity of the storage preparation after the equipment arrives at the job site and before start-up, which should be in accordance with API RP 686.

  7.4.3 The equipment shall be prepared for shipment after all testing and inspection has been completed and the equipment has been released by the purchaser. The preparation shall include that specified in 7.4.3.1 through 7.4.3.10.

Copyright American Petroleum Institute
Reproduced by IHS under license with API
Document provided by IHS Licensee=TECNA/5935100001, 11/02/2004 06:04:35 MST
Questions or comments about this message: please call the Document Policy Group

7.4.3.1 Unless otherwise specified, pumps shall not be disassembled after final performance testing. The pump, including the seal chamber, shall be drained to the extent practical, filled with a water-displacing inhibitor within 4 h of testing and redrained.

7.4.3.2 Exterior surfaces, except for machined surfaces, shall be given at least one coat of the manufacturer's standard paint. The paint shall not contain lead or chromates. Stainless steel parts need not be painted. The undersides of baseplates shall be prepared for grout in accordance with 6.3.17.

7.4.3.3 Exterior machined surfaces, except for corrosion-resistant material, shall be coated with a rust preventive.

7.4.3.4 Internal surfaces of bearing housings and carbon steel oil-systems components shall be coated with an oil-soluble rust preventive that is compatible with the lubricating oil.

7.4.3.5 Flanged openings shall be provided with metal closures at least 5 mm (0,19 in) thick, with elastomer gaskets and at least four full-diameter bolts. For studded openings, all nuts needed for the intended service shall be used to secure closures.

7.4.3.6 Threaded openings shall be provided with steel caps or steel plugs in accordance with 5.4.3.7.

7.4.3.7 Openings that have been bevelled for welding shall be provided with closures designed to prevent entrance of foreign materials and damage to the bevel.

7.4.3.8 Lifting points and lifting lugs shall be clearly identified.

7.4.3.9 The equipment shall be identified with item and serial numbers. Material shipped separately shall be identified with securely affixed, corrosion-resistant metal tags indicating the item and serial number of the equipment for which it is intended. Crated equipment shall be shipped with duplicate packing lists, one inside and one on the outside of the shipping container.

7.4.3.10 Exposed shafts and shaft couplings shall be wrapped with waterproof, mouldable waxed cloth or volatile-corrosion inhibitor paper. The seams shall be sealed with oil-proof adhesive tape.

7.4.4 Auxiliary piping connections furnished on the purchased equipment shall be impression-stamped or permanently tagged to agree with the vendor's connection table or general arrangement drawing. Service and connection designations shall be indicated. Symbols for all pump connections, including plugged connections, shall be in accordance Annex B.

7.4.5 Bearing assemblies shall be fully protected from the entry of moisture and dirt. If vapour-phase inhibitor crystals in bags are installed in large cavities, the bags shall be attached in an accessible area for ease of removal. If applicable, bags shall be installed in wire cages attached to flanged covers and bag locations shall be indicated by corrosion-resistant tags attached with stainless steel wire.

7.4.6 One copy of the manufacturer's standard installation manual shall be packed and shipped with the equipment

8 Specific pump types

8.1 Single-stage overhung pumps

8.1.1 Horizontal (Type OH2) pumps

Rear pump bearing housing supports are not permitted.

Copyright American Petroleum Institute
Reproduced by IHS under license with API
Document provided by IHS Licensee=TECNA/5935100001, 11/02/2004 06:04:35 MST
Questions or comments about this message: please call the Document Policy Group

8.1.2 Vertical in-line (Type OH3) pumps

8.1.2.1 A flat contact surface shall be provided on the bottom of the casing to make the pump stable if freestanding on a pad or foundation. The ratio of the unit centre of gravity height to the contact surface width shall be no greater than 3:1. This stability shall be achieved through the design of the casing or by a permanent external stand.

8.1.2.2 Pumps shall be designed so that they may either float with the suction and discharge pipe, or be bolted to a pad or foundation.

Flange loading on the pump can increase if the purchaser elects to bolt the unit down. This should be addressed in the piping design.

8.1.2.3 A minimum DN 15 (1/2 NPS) tapped drain connection shall be provided so that no liquid collects on the cover or driver support.

8.1.2.4 The pump and seal chamber shall be continuously vented with a high point connection in either the seal chamber or seal flush piping. Systems needing manual venting require purchaser approval.

If venting to atmosphere is not acceptable, the vent should be connected to the process piping at an elevation above the seal chamber.

8.1.2.5 Pumps shall be designed to facilitate removal and installation of the back-pullout assembly without removal of the driver.

● **8.1.2.6** If specified, a device shall be provided which allows direct rigging or lifting of the back-pullout assembly from outside the motor support with the driver in place.

8.1.2.7 With the purchaser's approval, bearing housings may be arranged for grease lubrication (5.11.4). The stabilized bearing-housing temperature shall not exceed 82 °C (180 °F) when operating at an ambient temperature of 43 °C (110 °F). Recommended greases shall be suitable for operation at these temperatures.

8.1.2.8 Drivers shall be aligned in the vendor's shop prior to shipment.

8.1.3 Integral gear-driven (Type OH6) pumps

8.1.3.1 The impeller shall be keyed or splined to the gearbox output shaft.

8.1.3.2 Integral-gear pumps may require removal of the driver to allow disassembly of the rotor and the seal assembly.

8.1.3.3 Impeller type shall be selected for the application and may be open, semi-open, or fully enclosed.

● **8.1.3.4** The need for a rotor lateral analysis shall be determined as described in 8.2.4.1. A lateral analysis should be specified only for unique, new or critical pumps.

NOTE Lateral critical speeds may be of concern with Type OH6 pumps. Normally pumps of this type are thoroughly investigated during development, and typical rotor dynamics are available and applicable.

8.1.3.5 Single-piece hydrodynamic radial bearings may be used.

● **8.1.3.6** Temperature and pressure gauges mounted directly on the gearbox shall be in accordance with ISO 10438 except that the diameter of the gauges shall be 50 mm (2,0 in). If specified, separable threaded solid-bar thermowells shall be supplied for temperature gauges.

8.1.3.7 Inducers, impellers and similar major rotating components shall be dynamically balanced to ISO 1940-1 grade G2.5, or to a residual unbalance of 7 g·mm (0,01 oz-in), whichever is greater. If possible, the mass of the arbor used for balancing shall not exceed the mass of the component being balanced. The resulting vibration measured during the performance test shall not exceed the levels in Table 7.

Copyright American Petroleum Institute
Reproduced by IHS under license with API
Document provided by IHS Licensee=TECNA/5935100001, 11/02/2004 06:04:35 MST
Questions or comments about this message: please call the Document Policy Group

8.2 Between-bearings pumps (types BB1, BB2, BB3 and BB5)

8.2.1 Pressure casings

8.2.1.1 Axially split casings may have a composition sheet gasket or a metal-to-metal joint; the vendor's bid shall state which is being offered.

8.2.1.2 Pumps for service temperatures below 150 °C (300 °F) may be foot-mounted.

8.2.1.3 For pumps with axially split casings, lifting lugs or tapped holes for eyebolts shall be provided for lifting only the top half of the casing and shall be so tagged. Methods for lifting the assembled machine shall be specified by the vendor [see 9.2.2.1 a) and Annex L].

- **8.2.1.4** If specified, proposed connection designs shall be submitted to the purchaser for approval before fabrication. The drawing shall show weld designs, size, materials, and pre-weld and post-weld heat treatments.

8.2.2 Rotor

8.2.2.1 Impellers of multistage pumps shall be individually located along the shaft by a shoulder or captive split ring in the direction of normal hydraulic thrust.

8.2.2.2 Rotors with clearance-fit impellers shall have mechanical means to limit impeller movement in the direction opposite to normal hydraulic thrust to 0,75 mm (0,030 in) or less.

- **8.2.2.3** If specified, rotors with shrink-fit impellers shall have mechanical means to limit movement in the direction opposite to normal hydraulic thrust to 0,75 mm (0,030 in) or less.

8.2.2.4 The runout of shafts and assembled rotors measured with the shaft or rotor supported on V-blocks or bench rollers adjacent to its bearings shall be within the limits given in Table 15.

8.2.3 Running clearances

8.2.3.1 Renewable casing bushings and interstage sleeves or the equivalent shall be provided at all interstage points.

8.2.3.2 Running clearances associated with components used to balance axial thrust or to serve as product-lubricated internal bearings may be the manufacturer's standard, provided these clearances are stated as exceptions to this International Standard (see 5.7.4) in the proposal and are approved by the purchaser. If the manufacturer's standard clearances are based on material combinations exhibiting superior wear characteristics, supporting data shall be included in the proposal.

Copyright American Petroleum Institute
Reproduced by IHS under license with API
Document provided by IHS Licensee=TECNA/5935100001, 11/02/2004 06:04:35 MST
Questions or comments about this message: please call the Document Policy Group

Table 15 — Shaft and rotor runout requirements

Flexibility factor F_f [a, b] mm² (in²)	Allowable shaft runout TIR µm (in)	Component fit on shaft	Allowable rotor radial runout, TIR [c] µm (in)
$> 1{,}9 \times 10^9$ ($3{,}0 \times 10^6$)	40 (0,001 5)	Clearance	90 (0,003 5)
		Interference	60 (0,002 5)
$\leqslant 1{,}9 \times 10^9$ ($3{,}0 \times 10^6$)	25 (0,001 0)	Clearance	75 (0,003 0)
		Interference	50 (0,002 0)

a $F_f = L^4/D^2$

where

L is the bearing span;

D is the shaft diameter (largest) at impeller.

b The shaft flexibility factor, F_f, is directly related to the static deflection of a simply supported shaft, and is therefore a good indicator of the runout attainable during manufacture and the quality of balance that can be achieved and maintained.

c Runout of impeller hubs, balancing drum and sleeves.

8.2.4 Dynamics

8.2.4.1 Lateral analysis

8.2.4.1.1 Depending on pump design, the first or second wet lateral critical speed of multistage and high-speed pumps can coincide with the operating speed, particularly as internal clearances increase with wear. A lateral analysis can predict if this coincidence is likely and whether the resulting vibration will be acceptable.

8.2.4.1.2 Unless otherwise specified, the need for a lateral analysis of a pump's rotor shall be determined using the process set out in Table 16. For this process, the following definitions apply:

a) *Identical pump:* same size, hydraulic design, number of stages, r/min, clearances, type of shaft seal (axial face or breakdown bushing), type of bearings, coupling weight, coupling overhang, and pumping the same liquid.

b) *Similar pump:* by agreement between purchaser and manufacturer, taking account of the factors listed in the preceding definition (item a).

c) *Classically stiff:* first dry critical speed is above the pump's maximum continuous speed by the following:

   1) 20 % for rotors designed for wet running only.

   2) 30 % for rotors designed to be able to run dry.

Copyright American Petroleum Institute
Reproduced by IHS under license with API
Document provided by IHS Licensee=TECNA/5935100001, 11/02/2004 06:04:35 MST
Questions or comments about this message: please call the Document Policy Group

Table 16 — Decision logic for rotor lateral analysis

Step	Action
1	Design pump
2	Do similar or identical pumps exist? If “yes” go to Step 5. If “no” go to Step 3.
3	Is rotor classically stiff? If “yes” go to Step 5. If “no” go to Step 4.
4	Analysis required
5	Analysis not recommended

- **8.2.4.1.3** If a lateral analysis is required by the process in 8.2.4.1.2, or if specified by the purchaser, it shall be carried out and its results assessed in accordance with Annex I.

8.2.4.2 Rotor balancing

8.2.4.2.1 Rotors of the categories listed below shall be two-plane dynamically balanced at low speed to the balance grade in Table 17:

— multistage pumps (three or more stages);

— one- and two-stage pumps whose maximum continuous speed is greater than 3 800 r/min.

The sequence of rotor assembly and balance correction shall follow ISO 11342. For balancing, the rotor does not include the pump half-coupling hub or the rotary units of the mechanical seals.

Table 17 shows ISO 1940-1 grade G2.5 for all interference fit rotors to speeds of 3 800 r/min. This is based on two factors.

— At 3 800 r/min the upper limit of balance grade G2.5 produces a force due to unbalance of 10 % of rotor weight, which means that unbalance will not have any material effect on the rotor’s operating shape;

— For rotors whose flexibility is high (see Table 15), it is not practical to achieve and maintain the rotor straightness necessary for balance grade G1.

The mass eccentricity associated with balance grade G1 is very small; for example 2,5 µm (0,000 10 in) maximum for operation at 3 800 r/min. This has two consequences:

— it is not practical to balance the components to better than G2.5 (see 5.9.4.1) because the arbor effectively changes when the component is mounted;

— the balance quality may not be verifiable if the rotor is disturbed from its position on the balancing stand or disassembled and reassembled. It is normally possible, however, to perform a residual unbalance check to verify the accuracy of the balancing stand.

Copyright American Petroleum Institute
Reproduced by IHS under license with API
Document provided by IHS Licensee=TECNA/5935100001, 11/02/2004 06:04:35 MST
Questions or comments about this message: please call the Document Policy Group

Table 17 — Rotor balance requirements

Component fit on shaft	Maximum continuous speed r/min	Flexibility factor, L^4/D^2 mm^2 (in^2)	Rotor balance grade
Clearance	⩽ 3 800 [a]	No limit	[b]
Interference	⩽ 3 800	No limit	G2.5 (8 W/n) [c, d]
	> 3 800	⩽ $1{,}9 \times 10^9$ ($3{,}0 \times 10^6$)	G1 (4 W/n) [d]

NOTE See Table 15 for shaft and rotor runout requirements.

[a] To allow for 5 % speed increase.

[b] Balance correction during assembly is not feasible because clearance fit will not maintain corrected balance.

[c] If rotors of higher flexibility are used at speeds above 3 800 r/min, achieving and maintaining this balance level requires special attention to design, manufacture and maintenance.

[d] Approximately equal to the midpoint of the corresponding ISO balance quality grade.

8.2.4.2.2 For rotor balancing, any vacant single keyways shall be filled with crowned half keys.

8.2.4.2.3 If a rotor is balanced as an assembly, a residual unbalance test shall be performed. The check shall be carried out after final balancing of the rotor, following the procedure given in Annex J. The weight of all half keys used during final balancing of the assembled rotor shall be recorded on the residual unbalance worksheet.

8.2.5 Bearings and bearing housings

8.2.5.1 If supplied, hydrodynamic radial bearings shall be in accordance with 8.2.5.1.1 through 8.2.5.1.4.

8.2.5.1.1 Bearings shall be split for ease of assembly, precision-bored, and of the sleeve or pad type, with steel-backed, babbitted replaceable liners, pads or shells. The bearings shall be equipped with antirotation pins and shall be positively secured in the axial direction.

8.2.5.1.2 The liners, pads or shells shall be in axially split housings and shall be replaceable without having to dismantle any portion of the casing or remove the coupling hub.

8.2.5.1.3 Bearings shall be designed to prevent installation backwards or upside down or both.

8.2.5.1.4 If the shaft contains more than 1,0 % chromium and the journal surface speed is above 20 m/s (65 ft/s), the shaft's journal shall be hard-chromium-plated, hard-coated, or sleeved with carbon steel.

NOTE The purpose of this construction is to avoid damage to the bearing from "wire wooling".

8.2.5.2 Hydrodynamic thrust bearings shall be in accordance with 8.2.5.2.1 through 8.2.5.2.5 below.

8.2.5.2.1 Thrust bearings shall be of the steel-backed, babbitted multiple-segment type, designed for equal thrust capacity in both directions and arranged for continuous pressurized lubrication to each side. Both sides shall be of the tilting-pad type, incorporating a self-levelling feature that assures that each pad carries an equal share of the thrust load with minor variation in pad thickness.

8.2.5.2.2 Thrust collars shall be positively locked to the shaft to prevent fretting.

8.2.5.2.3 Both faces of thrust collars shall have a surface roughness of not more than 0,4 µm (16 µin) Ra, and, after mounting, the axial total indicated runout of either face shall not exceed 13 µm (0,0005 in).

Copyright American Petroleum Institute
Reproduced by IHS under license with API
Document provided by IHS Licensee=TECNA/5935100001, 11/02/2004 06:04:35 MST
Questions or comments about this message: please call the Document Policy Group

- **8.2.5.2.4** Thrust bearings shall be sized for the maximum continuous applied load (see 5.10.1.2). At this load, and the corresponding rotative speed, the following parameters shall be met:

  a) minimum oil-film thickness of 8 µm (0,000 3 in);

  b) maximum unit pressure (load divided by area) of 3 500 kPa (35 bar) (500 psi);

  c) maximum calculated babbit surface temperature of 130 °C (265 °F).

  If specified, thrust-bearing sizing shall be reviewed and approved by the purchaser.

  The limits given above correspond to a design factor of 2 or more, based on the bearing's ultimate capacity. The calculated babbit surface temperature is a design value and is not representative of actual babbit temperatures under these conditions. Bearings sized to meet the above criteria have the following allowable metal temperatures on shop test and in the field (see 5.10.2.4):

  — shop test on water and normal operation in the field (7.3.3.4.b): 93 °C (200 °F);

  — field alarm or trip: 115 °C (240 °F).

  8.2.5.2.5 Thrust bearings shall be arranged to allow axial positioning of each rotor relative to the casing and the setting of the bearing's clearance or preload.

  8.2.5.3 If the inlet oil temperature exceeds 50 °C (120 °F), special consideration shall be given to bearing design, oil flow and allowable temperature rise. Oil outlets from thrust bearings shall be as recommended by the bearing manufacturer for the collar speed and lubrication method involved. Oil connections on bearing housings shall be in accordance with 6.5.

  8.2.5.4 Axially split bearing housings shall have a metal-to-metal split joint whose halves are located by means of cylindrical dowels.

8.2.6 Lubrication

- **8.2.6.1** If specified or if recommended by the vendor and approved by the purchaser, a pressure-lubrication system shall be furnished to supply oil at a suitable pressure to the pump bearings, the driver, and any other driven equipment, including gears. Figure B.10 and Table B.1 show the details of the minimum acceptable system.

  8.2.6.2 External pressure-lubrication systems shall comply with the requirements of ISO 10438-3 and Figure B.10 and Table B.1.

  8.2.6.3 The oil-drain piping shall be sloped 1 in 50 [20 mm/m (0,25 in/ft)].

  8.2.6.4 If oil is supplied from a common system to two or more machines (such as a pump, a gear and a motor), the oil's characteristics shall be suitable for all equipment supplied. The vendor having unit responsibility shall obtain approval from the purchaser and the other equipment vendors for the oil selection.

  NOTE The typical lubricants employed in a common oil system are mineral (hydrocarbon) oils that correspond to ISO Grades 32 through 68, as specified in ISO 3448.

- **8.2.6.5** If specified, the pressure-lubrication system shall conform to the requirements of ISO 10438-2. For such a lubrication system, datasheets should be supplied.

8.2.7 Testing

8.2.7.1 For pressure-lubricated bearings, test stand oil and oil system components downstream of the filters shall meet the cleanliness requirements specified in ISO 10438-3.

Copyright American Petroleum Institute
Reproduced by IHS under license with API
Document provided by IHS Licensee=TECNA/5935100001, 11/02/2004 06:04:35 MST
Questions or comments about this message: please call the Document Policy Group

8.2.7.2 During the shop test of pumps with pressure-lubricated bearings, the oil flowrate to each bearing housing shall be measured and recorded.

8.2.7.3 All purchased vibration probes, transducers and oscillator-demodulators shall be in use during the test. If vibration probes are not furnished by the vendor or if the purchased probes are not compatible with shop readout facilities, shop probes and readouts that meet the accuracy requirements of API 670 shall be used. The vibration measured with this instrumentation shall be the basis for acceptance or rejection of the pump (see 5.9.3.6).

8.2.7.4 With the purchaser's approval, single-stage double-suction pumps may be assembled for testing by driving from the opposite end of the pump when compared to the general arrangement for the contract pump and driver. No retest is required after final assembly. If such an arrangement is required, it shall be stated in the proposal.

NOTE This is sometimes required to accommodate test stand piping constraints.

● **8.2.7.5** If specified, hydrodynamic bearings shall be removed, inspected by the purchaser or his representative, and reassembled after the performance test is completed.

8.2.8 Preparation for shipment

8.2.8.1 If a spare rotor or element is purchased, it shall be prepared for unheated indoor storage of 3 years. Storage preparation shall include treatment with a rust preventive and enclosure in a vapour-barrier envelope with slow-release vapour-phase inhibitor. The rotor or element shall be boxed for the type of shipment specified. A rotor shall have a resilient material (but not lead, TFE or PTFE), at least 3 mm (0,12 in) thick, between the rotor and its support cradle; support shall not be at the rotor's journals. An element shall have its rotor secured to prevent movement within the stator.

● **8.2.8.2** If specified, spare rotors and cartridge-type elements shall be prepared for vertical storage. A rotor shall be supported from its coupling end with a fixture designed to support 1,5 times the rotor's weight without damaging the shaft. A cartridge-type element shall be supported from the casing cover (with the rotor hanging from its thrust bearing).

● **8.2.8.3** If specified, a shipping and storage container designed to store the rotor or cartridge vertically shall be provided.

● **8.2.8.4** If specified, the shipping and storage container shall be designed to allow inert-gas inhibition during storage.

8.3 Vertically suspended pumps (types VS1 through VS7)

8.3.1 General

8.3.1.1 Specified discharge pressure shall be at the purchaser discharge connection. Hydraulic performance shall be corrected for column static and friction head losses. Bowl or pump casing performance curves shall be furnished with the correction indicated.

8.3.1.2 Bearing housings for vertically suspended pumps need not be arranged so that bearings can be replaced without disturbing pump drives or mountings.

8.3.2 Pressure casings

8.3.2.1 Jackscrews and casing alignment dowels are not required for rabbetted bowl assemblies.

8.3.2.2 Pumps shall be provided with vent connections for suction barrels and seal chambers.

Copyright American Petroleum Institute
Reproduced by IHS under license with API
Document provided by IHS Licensee=TECNA/5935100001, 11/02/2004 06:04:35 MST
Questions or comments about this message: please call the Document Policy Group

8.3.3 Rotors

8.3.3.1 The requirement for fully enclosed impellers (5.6.1) does not apply to vertically suspended pumps.

8.3.3.2 All pump shafts shall be machined or ground and finished throughout their entire length. The total indicated run-out shall not exceed 40 µm/m (0,000 5 in/ft) of length. Total run-out shall not exceed 80 µm (0,003 in) over total shaft length.

8.3.3.3 The pump shaft shall be in one piece unless otherwise approved by the purchaser (because of total shaft length or shipping restrictions).

8.3.4 Wear parts and running clearances

8.3.4.1 Renewable casing bushings shall be provided at all interstage and other bushing locations. However, the interstage pressure differential and the character of the liquid handled (for example, dirty or non-lubricating) should determine the need for corresponding shaft sleeves.

8.3.4.2 The running clearances specified in 5.7.4 do not apply to the clearances of bushings. The clearances used shall be stated in the proposal and approved by the purchaser.

8.3.4.3 Pumps with semi-open impellers in an erosive service shall have a replaceable casing liner.

8.3.5 Dynamics

- If specified, the vendor shall furnish a dynamic analysis of the pump and its support structure to confirm acceptability of the design. The purchaser and the vendor shall agree on the extent, method and acceptance criteria for this analysis.

Vertically suspended pumps are generally flexible structures with running speeds located between natural frequencies. As such, they are susceptible to resonant vibration if their separation margins are not verified during design. The basic structural elements typically include the foundation, pump structures and motor frames. Typically the deflection of the foundation represents less than 5 % of the total deflection of the structural elements. If foundation data are not available when the analysis is being conducted, an agreed-upon value should be used. Generally, a 20 % margin of separation should be maintained between the natural frequency of the motor support structure and the operating speed.

8.3.6 Bushings and bearings

8.3.6.1 Bushings shall be suitably corrosion-resistant and abrasion-resistant for the specified product and temperature. The maximum spacing between shaft bushings shall be in accordance with Figure 32 in order to maintain the first critical speed above the maximum allowable continuous speed.

8.3.6.2 Thrust bearings that are integral with the driver shall meet the requirements of 6.1.6. Thrust bearings and housings integral with the pump shall meet the applicable requirements of 5.10.1. To allow axial rotor adjustment and oil lubrication, the thrust bearing shall be mounted with an interference fit on a slide-fit, key-driven sleeve.

8.3.6.3 Except for sump pumps of Type VS4, the first-stage impeller shall be located between bushings.

NOTE Although between-bushing first-stage impellers can result in superior rotor support, certain applications, such as for sumps, require superior suction performance and may benefit from an overhung first-stage impeller arrangement.

8.3.7 Lubrication

Bushings in vertical pumps are normally lubricated by the liquid pumped. Alternative methods of lubrication shall be proposed if the pumped liquid is not suitable.

Copyright American Petroleum Institute
Reproduced by IHS under license with API
Document provided by IHS Licensee=TECNA/5935100001, 11/02/2004 06:04:35 MST
Questions or comments about this message: please call the Document Policy Group

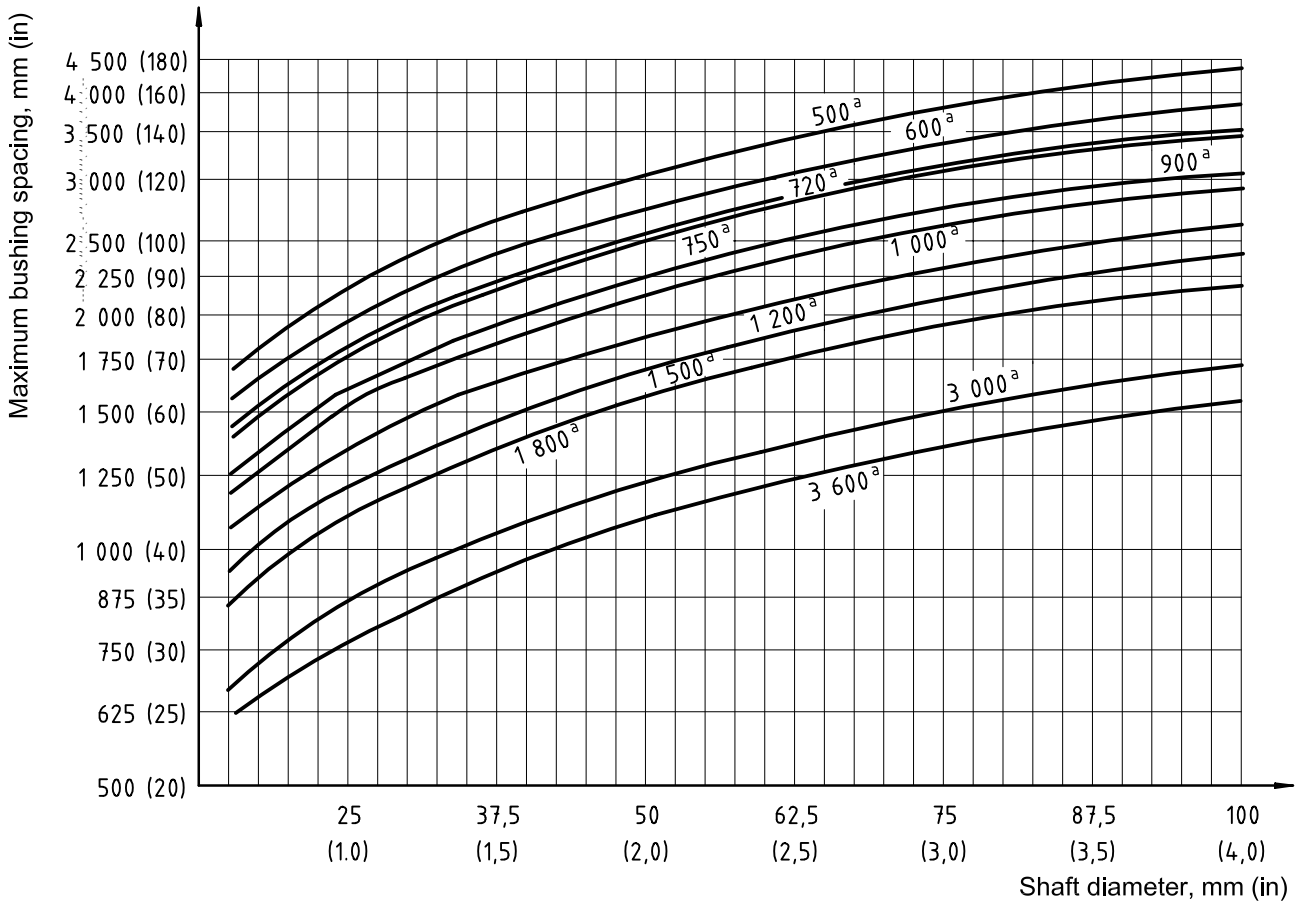

a Curves for various rotational speeds, r/min.

Figure 32 — Maximum spacing between shaft guide bushings

8.3.8 Accessories

8.3.8.1 Drivers

Pumps and motor assemblies that could be damaged by reverse rotation shall be provided with a non-reverse ratchet or another purchaser-approved device to prevent reverse rotation.

8.3.8.2 Couplings and guards

8.3.8.2.1 Coupling faces shall be perpendicular to the axis of the coupling within 0,1 µm/mm (0,000 1 in/in) of face diameter or 13 µm (0,000 5 in) total indicated run-out, whichever is greater.

8.3.8.2.2 Vertical pumps without integral thrust bearings require rigid adjustable-type couplings.

8.3.8.2.3 On vertical pumps equipped with rigid couplings and mechanical seals, the coupling shall be a spacer type. The spacer shall be of sufficient length to permit replacement of the seal assembly, including the sleeve, without removal of the driver.

8.3.8.3 Mounting plates

- **8.3.8.3.1** If specified, the mounting plate for double-casing pumps shall be separate from the main body flange and located sufficiently below it to permit the use of through-bolting on the body flange (see Figure 33).

Copyright American Petroleum Institute
Reproduced by IHS under license with API
Document provided by IHS Licensee=TECNA/5935100001, 11/02/2004 06:04:35 MST
Questions or comments about this message: please call the Document Policy Group

This results in a higher joint integrity and should be considered for critical and cryogenic services.

8.3.8.3.2 A minimum of four alignment-positioning screws shall be provided for each drive-train component that has a mass greater than 250 kg (500 lb) to facilitate horizontal adjustment.

- **8.3.8.3.3** If specified, pumps shall be provided with a separate sole plate for bolting and grouting to the foundation (see Figure 33). This plate shall be machined on its top surface for mounting of the discharge head, can, or motor support.

8.3.8.4 Piping and appurtenances

If mechanical seals and drivers are not installed prior to shipment, the seal piping system shall not be fully assembled.

8.3.9 Testing

8.3.9.1 Pumps shall be tested as complete assemblies. Tests using only bowls and impellers are not recommended. In cases where assembled unit testing is impractical, the vendor shall submit alternative testing procedures with the proposal. Suction cans, if supplied, are not required for performance testing.

- **8.3.9.2** If specified, a resonance test with the pump unpiped shall be conducted on the pump structure/driver frame assembly. The test shall be performed as follows.

  — Excite the assembly by making an impact on the driver frame in the direction of the discharge flange.

  — Determine the natural frequency(ies) by the response.

  — Excite the assembly by making an impact on the driver frame at 90° to the direction of the discharge flange.

  — Determine the natural frequency(ies) by the response.

The natural frequencies so determined shall be at least 10 % below the minimum continuous operating speed or shall be at least 10 % above the maximum continuous operating speed.

8.3.10 Single-case diffuser (VS1) and volute (VS2) pumps

8.3.10.1 The components which constitute the pressure casing are the casing (bowls), column, and discharge head.

8.3.10.2 Line shafts may be open or enclosed. For enclosed line shafts, the type of lubrication shall be approved by the purchaser.

Open line-shafting is lubricated by the pumped liquid. If the pumped liquid is not suitable as a lubricant, enclosed line-shafting may be provided to ensure a clean lubrication supply for line shaft bearings.

8.3.10.3 The discharge-head mounting surface shall be suitable for both grouting and mounting on a machined sole plate.

8.3.10.4 Thrust restraints are required at the pump if an expansion joint is installed on the discharge nozzle. Design review of the proposed installation and piping by the vendor is recommended.

- **8.3.10.5** If specified, line shafting shall be furnished with hardened sleeves under each bushing.

8.3.10.6 Unless otherwise specified, integral bushing spiders and rabbetted fits shall be used for all column sizes.

8.3.10.7 Unless otherwise specified, bowls shall be flanged and shall have metal-to-metal rabbetted fits.

Copyright American Petroleum Institute
Reproduced by IHS under license with API
Document provided by IHS Licensee=TECNA/5935100001, 11/02/2004 06:04:35 MST
Questions or comments about this message: please call the Document Policy Group

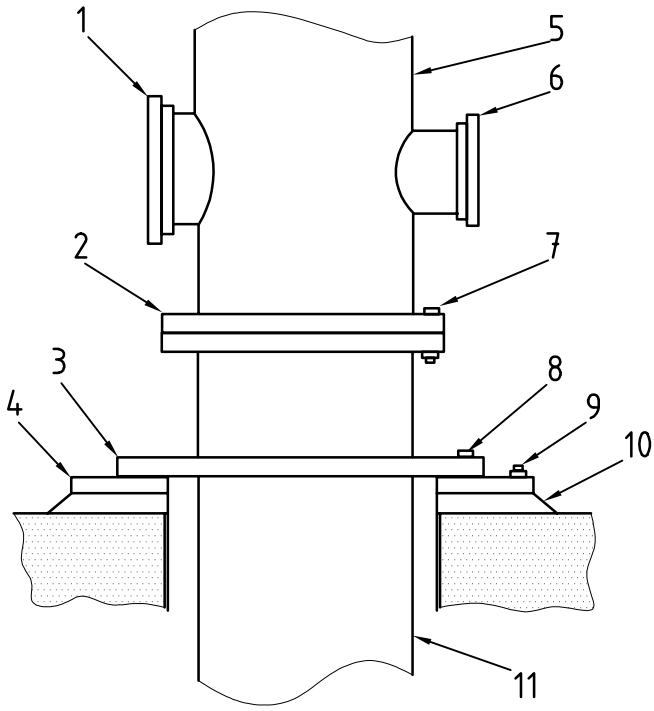

Key

1 suction flange
2 main body flange
3 mounting flange
4 sole plate
5 pump head
6 discharge flange
7 main body flange through-bolting (typical)
8 hold-down bolts (typical)
9 anchor bolts (typical)
10 grout
11 can (outer casing)

Figure 33 — Typical mounting for vertically suspended double-case pumps (VS6 and VS7) with sole plate

8.3.11 Single-casing axial flow (VS3) pumps

8.3.11.1 The components which constitute the pressure casing are the casing (bowl), column and discharge head.

8.3.11.2 Unless otherwise specified, integral bushing spiders and rabbetted fits shall be used for all size columns

8.3.11.3 Bowls shall have metal-to-metal rabbetted fits.

8.3.12 Single-casing line shaft (VS4) and cantilever (VS5) pumps

8.3.12.1 For VS4 pumps, bushings shall be provided to support the shaft and impeller.

Copyright American Petroleum Institute
Reproduced by IHS under license with API
Document provided by IHS Licensee=TECNA/5935100001, 11/02/2004 06:04:35 MST
Questions or comments about this message: please call the Document Policy Group

8.3.12.2 VS5 pumps shall comply with 8.3.12.2 a) through 8.3.12.2 d) below.

a) The rotor shall be cantilevered from its bearing assembly. Submerged bottom bushings are not used to guide the shaft.

b) The shaft stiffness shall limit total deflection, without the use of a casing bushing, such that the impeller does not contact the pump casing under the most severe dynamic conditions over the complete head-flow curve with a maximum diameter impeller and at the maximum speed and fluid density.

c) Cantilever type pumps shall have their first dry critical speed, for their rotors, 30 % above their maximum allowable continuous speed.

d) For cantilever type VS5 pumps, the shaft total indicated runout shall not exceed 50 µm (0,002 in) as measured on the shaft directly above the mechanical seal or stuffing box.

8.3.12.3 For open-system sump-pump service, the pressure-containing components Type VS4 and Type VS5 pumps are the casing, suction cover and discharge line. For closed-system pressurized or vacuum tank service, the seal chamber, pump coverplate and tank cover also become pressure-containing components.

8.3.12.4 For VS4 pumps, the thrust bearing shall be designed for either grease or oil mist lubrication. Bushings may be lubricated with water, grease or product, or be self-lubricated. Type VS5 pump bearings shall be grease-lubricated. The stabilized bearing housing temperature shall not exceed 82 °C (180 °F) when operating at an ambient temperature of 43 °C (110 °F). Recommended greases shall be suitable for operation at these temperatures.

8.3.12.5 Mechanical seals are typically not supplied on VS4 and VS5 pumps unless required for closed-system service.

8.3.12.6 Lifting lugs shall be provided in the coverplate for lifting the pump assembly, including the driver.

8.3.12.7 The discharge nozzle and coverplate shall be designed as required in 5.3.3.

If the pump is mounted in a vessel, the pump-mounting nozzle of the vessel should also be designed to withstand the allowable nozzle loads. See 5.5 for allowable nozzle loads.

8.3.12.8 For flammable or hazardous fluids, coverplate joints shall be vapour tight. The coverplate design and mounting shall be agreed to by the purchaser and vendor.

8.3.12.9 Mechanical seals, if supplied, shall be located at the coverplate to seal the vapour in the supply tank or vessel. Mechanical seals normally seal vapour; however, they shall be designed to operate in liquid in the event of tank or vessel overfilling. The seal chamber shall have provisions for a high-point vent.

8.3.12.10 Pump-out vanes may be used in lieu of wear rings to reduce leakage back to the sump.

8.3.12.11 Typically, spacer couplings are not used on VS4 and VS5 type pumps. Coupling hubs shall be supplied with slip fits to the shaft. The coupling hubs and keys shall be secured to the shaft with set-screws to facilitate final coupling adjustment.

8.3.13 Double-casing diffuser (VS6) and volute (VS7) pumps

8.3.13.1 The components which constitute the pressure casing of Type VS6 pumps are the discharge head and the suction can. The components which constitute the pressure casing of Type VS7 pumps are the outer casing (complete with the discharge nozzle), the head plate, and the suction pipe.

● **8.3.13.2** If specified, bowls and column pipe shall be hydrostatically tested with liquid at a minimum of 1,5 times the maximum differential pressure developed by the bowl assembly. Hydrostatic testing shall be conducted in accordance with the requirements of 7.3.2.

8.3.13.3 Complete outer-case venting shall be ensured by means of a high-point vent connection.

Copyright American Petroleum Institute
Reproduced by IHS under license with API
Document provided by IHS Licensee=TECNA/5935100001, 11/02/2004 06:04:35 MST
Questions or comments about this message: please call the Document Policy Group

8.3.13.4 Provision shall be made to ensure complete venting of the inner assembly within the seal chamber or associated auxiliary process piping.

● **8.3.13.5** If specified, the suction can shall be supplied with a drain piped to the surface.

8.3.13.6 Column sections shall incorporate integral bushing spiders and rabbetted fits for all column sizes.

9 Vendor's data

9.1 General

9.1.1 The information to be furnished by the vendor is specified in 9.2 and 9.3.

9.1.2 The vendor's data shall be present on transmittal (cover) letters, title pages and in title blocks or other prominent position on drawings, and shall include the following information:

a) the purchaser’s/owner’s corporate name;

b) the job/project number;

c) the equipment item number and service name;

d) the inquiry or purchaser-order number;

e) any other identification specified in the inquiry or purchaser order;

f) the vendor’s identifying proposal number, shop order number, serial number, or other reference required to completely identify return correspondence.

● **9.1.3** If specified, a coordination meeting shall be held, preferably at the vendor’s plant, within four to six weeks after order commitment. Unless otherwise specified, the vendor shall prepare and distribute an agenda prior to this meeting, which as a minimum shall include a review of the following items:

a) the purchase order, scope of supply, unit responsibility, and subvendor items;

b) the data sheets;

c) applicable specifications and previously agreed-upon exceptions;

d) schedules for transmittal of data, production, and testing;

e) the quality assurance programme and procedures;

f) inspection, expediting, and testing;

g) schematics and bills of material for auxiliary systems;

h) the physical orientation of the equipment, piping and auxiliary systems;

i) coupling selection and rating;

j) thrust and journal bearing sizing, estimated loadings and specific configurations;

k) rotor dynamic analyses (lateral, torsional and transient torsional, as required; commonly not available for 10 weeks to 12 weeks);

Copyright American Petroleum Institute
Reproduced by IHS under license with API
Document provided by IHS Licensee=TECNA/5935100001, 11/02/2004 06:04:35 MST
Questions or comments about this message: please call the Document Policy Group

l) equipment performance, alternative operating conditions, start-up, shutdown and any operating limitations;

m) scope and details of any pulsation or vibration analysis;

n) instrumentation and controls;

o) identification of items for stress analysis or other design reviews;

p) other technical items.

9.2 Proposals

9.2.1 General

9.2.1.1 The vendor shall forward the original proposal and the specified number of copies to the addressee specified in the inquiry documents. As a minimum, the proposal shall include the data specified in 9.2.2 through 9.2.5, as well as a specific statement that the system and all its components are in strict accordance with this International Standard. If the system and components are not in strict accordance, the vendor shall include a list that details and explains each deviation. The vendor shall provide details to enable the purchaser to evaluate any proposed alternative designs. All correspondence shall be clearly identified in accordance with 9.1.2.

9.2.1.2 Clearances less than those required by Table 5 shall be stated as an exception to this International Standard in the proposal.

9.2.2 Drawings

9.2.2.1 The drawings indicated on the Vendor Drawing and Data Requirements (VDDR) form (see example in Annex L) shall be included in the proposal. As a minimum, the following data shall be furnished:

a) a general arrangement or outline drawing for each major skid or system, showing direction of rotation, size and location of major purchaser connections; overall dimensions; maintenance clearance dimensions; overall weights; erection weights; maximum maintenance weights (indicated for each piece), lifting points and methods of lifting the assembled machine and, if applicable, the standard baseplate number (see Annex D);

b) cross-sectional drawings showing the details of the proposed equipment;

c) schematics of all auxiliary systems, including the seal flush, lubricating oil, control and electrical systems. Bills of material shall be included.

9.2.2.2 If typical drawings, schematics and bills of material are used, they shall be marked up to show the correct weight and dimension data and to reflect the actual equipment and scope proposed.

9.2.3 Technical data

The following data shall be included in the proposal:

a) the purchaser's data sheets, with complete vendor's information entered thereon and literature to fully describe details of the offering;

b) the predicted noise data (5.1.16);

c) the Vendor Drawing and Data Requirements form (see example in Annex L), indicating the schedule according to which the vendor agrees to transmit all the data specified as part of the purchase order;

d) a schedule for shipment of the equipment, in weeks after receipt of the order;

Copyright American Petroleum Institute
Reproduced by IHS under license with API
Document provided by IHS Licensee=TECNA/5935100001, 11/02/2004 06:04:35 MST
Questions or comments about this message: please call the Document Policy Group

e) a list of major wearing components, showing interchangeability with other items on the project or the owner's existing machines;

f) a list of spare parts recommended for start-up and normal maintenance purposes (see Table 18);

g) a list of the special tools furnished for maintenance (see 6.6.1);

h) a description of any special weather protection and winterisation required for start-up, operation, and periods of idleness, under the site conditions specified on the data sheets. This description shall clearly indicate the protection to be furnished by the purchaser as well as that included in the vendor's scope of supply;

i) a complete tabulation of utility requirements, e.g. steam, water, electricity, air, gas, lubricating oil (including the quantity and supply pressure of the oil required, and the heat load to be removed by the oil), and the nameplate power rating and operating power requirements of auxiliary drivers. Approximate data shall be clearly indicated as such;

j) a description of any optional or additional tests and inspection procedures for materials as required by 7.3.4 or 7.2.2.1;

k) a description of any special requirements whether specified in the purchaser's inquiry or as outlined in 5.1.11, 5.1.12, 5.1.13, 5.2.12.2, 5.3.4, 5.9.3.1, 5.10.2.4, 6.1.3, 6.1.6, 6.2.13, 8.2.1.1, 8.2.3.2, 8.2.7.4, 8.3.4.2, 8.3.9.1, 9.2.1.2, 9.2.2.1, 9.3.4.2, 9.3.5.1 and 9.3.9.1;

● l) if specified, a list of similar machines installed and operating under similar conditions;

m) any start-up, shutdown, or operating restrictions required to protect the integrity of the equipment;

n) the calculated specific speed;

o) any test facility limitations that may require the vendor to assemble and drive single-stage, double-suction pumps from the opposite end for testing (see 8.2.7.4);

p) a list of any components that can be construed as being of alternative design, hence requiring purchaser's acceptance (4.2)

9.2.4 Curves

The vendor shall provide complete performance curves, including differential head, efficiency, water NPSHR, and power expressed as functions of flowrate. Except for low specific-speed designs where it would not be feasible, the curves shall be extended to at least 120 % of flowrate at peak efficiency, and the rated operating point shall be indicated. The head curve for maximum and minimum impeller diameters shall be included. The impeller identification number, specific speed and suction-specific speed shall be shown on the curves. If applicable, the curves shall indicate viscosity corrections. Minimum flow (both thermal and stable), preferred and allowable operating regions, and any limitations of operation shall be indicated.

9.2.5 Options

● If specified, the vendor shall furnish an outline of the procedures to be used for each of the special or optional tests that have been specified by the purchaser or proposed by the vendor.

Copyright American Petroleum Institute
Reproduced by IHS under license with API
Document provided by IHS Licensee=TECNA/5935100001, 11/02/2004 06:04:35 MST
Questions or comments about this message: please call the Document Policy Group

Table 18 — Recommended spare parts

	Number of identical pumps (n)						
	1 to 3	4 to 6	⩾ 7	1 to 3	4 to 6	7 to 9	⩾ 10
	Recommended number of spare parts						
Part	**Start-up**			**Normal maintenance**			
Cartridge [b, e]				1	1	1	1
Element [b, f]				1	1	1	1
Rotor [c, g]				1	1	1	1
Case [a]							1
Head (case cover and stuffing box)							1
Bearing bracket [a]							1
Shaft (with key)				1	1	2	n/3
Impeller				1	1	2	n/3
Wear rings (set) [h]	1	1	1	1	1	2	n/3
Bearings, complete (rolling element, radial) [a, i]	1	1	2	1	2	n/3	n/3
Bearings, complete (rolling element, thrust) [a, i]	1	1	2	1	2	n/3	n/3
Bearings, complete (hydrodynamic, radial) [a, i]	1	1	2	1	2	n/3	n/3
Bearing pads only (hydrodynamic, radial) [a, i]	1	1	2	1	2	n/3	n/3
Bearings, complete (hydrodynamic, thrust) [a, i]	1	1	2	1	2	n/3	n/3
Bearing pads only (hydrodynamic, thrust) [a, i]	1	1	2	1	2	n/3	n/3
Mechanical seal / packing [d, h, i]	1	2	n/3	1	2	n/3	n/3
Shaft sleeve [h]	1	2	n/3	1	2	n/3	n/3
Gaskets, shims, O-rings (set) [h]	1	2	n/3	1	2	n/3	n/3
Add for vertical pump:							
Bowls						n/3	
Spiders or spider bushings (set)			1	1	1	n/3	n/3
Bearings, bushings (set)	1	1	2	1	1	n/3	n/3
Add for high speed integral gear:							
Gear box		1	1	1	1	1	n/3
Diffuser and cover	1	1	1	1	1	1	n/3
Splined shaft	1	1	1	1	1	1	n/3
Gear box housing				1	1	1	n/3
Oil pump, internal		1	1	1	1	1	n/3
Oil pump, external		1	1	1	1	1	n/3
Oil filter	1	2	n/3	1	2	3	n/3

[a] Horizontal pumps only

[b] Vital-service pumps are generally unspared, partially spared or multistage. When a vital machine is down, production loss or violation of environmental permits results.

[c] Essential-service pumps are required for operation and have an installed spare. A production loss occurs only if main and spare fail simultaneously.

[d] Cartridge-type mechanical seals include sleeve and gland.

[e] Cartridge consists of assembled element plus discharge head, seal(s) and bearing housing(s).

[f] Element consist of assembled rotor plus stationary hydraulic parts [diffuser(s) or volute(s)].

[g] Rotor consists of all rotating parts attached to the shaft, except the half-coupling.

[h] Normal-wear parts (see 5.1.1).

[i] Per pump set.

Copyright American Petroleum Institute
Reproduced by IHS under license with API
Document provided by IHS Licensee=TECNA/5935100001, 11/02/2004 06:04:35 MST
Questions or comments about this message: please call the Document Policy Group

9.3 Contract data

9.3.1 General

9.3.1.1 Contract data shall be furnished by the vendor in accordance with the agreed VDDR form (see example in Annex L).

9.3.1.2 Each drawing shall have a title block in the lower right-hand corner with the date of certification, vendor's data specified in 9.1.2, revision number and date and title. Similar information shall be provided on all other documents.

9.3.1.3 The purchaser and vendor shall agree to the timing and extent of drawing and data review. Review by the purchaser does not constitute permission to deviate from any requirements in the order unless specifically agreed upon in writing.

9.3.1.4 A complete list of vendor data shall be included with the first issue of the major drawings. This list shall contain titles, drawing numbers, and a schedule for transmission of all the data the vendor will furnish (see example in Annex L).

9.3.2 Drawings and technical data

9.3.2.1 The drawings and data furnished by the vendor shall contain sufficient information so that, together with the manuals specified in 9.3.5, the purchaser can properly install, operate and maintain the equipment covered by the purchase order. All contract drawings and data shall be clearly legible (8-point minimum font size even if reduced from a larger size drawing), shall cover the scope of the agreed VDDR form (see example in Annex L) and shall satisfy the applicable detailed descriptions.

Dimensional outline drawings shall indicate the tolerance for pump suction and discharge nozzle face and centreline locations referenced from the centreline of the nearest baseplate anchor-bolt hole. The centreline of baseplate anchor-bolt hole locations shall indicate the tolerance from a common reference point on the baseplate.

9.3.2.2 Certified test curves and data (see example in Annex M) shall be submitted within 15 days after testing and shall include head, power recalculated to the proper specific gravity, and efficiency plotted against flowrate. If applicable, viscosity corrections shall be indicated. The water-NPSHR curve shall be included, drawn from actual test data, for an impeller cast from the same pattern. The curve sheet shall include the maximum and minimum diameters of the impeller design supplied, the identification number of the impeller or impellers, and the pump serial number.

9.3.3 Progress reports

The vendor shall submit progress reports to the purchaser at the intervals specified on the VDDR Form (see example in Annex L).

9.3.4 Parts lists and recommended spares

9.3.4.1 The vendor shall submit complete parts lists for all equipment and accessories supplied. The lists shall include manufacturer’s unique part numbers, materials of construction, and delivery times. Materials shall be identified as specified in 5.12.1. Each part shall be completely identified and shown on cross-sectional or assembly-type drawings so that the purchaser may determine the interchangeability of these parts with other equipment. Parts that have been modified from standard dimensions and/or finish to satisfy specific performance requirements shall be uniquely identified by part number for interchangeability and future duplication purposes. Standard purchased items shall be identified by the original manufacturer’s name and part number.

9.3.4.2 The vendor shall indicate on each of these complete parts lists all those parts that are recommended as start-up or maintenance spares, and the recommended stocking quantities of each. These should include spare parts recommendations of sub-suppliers that were not available for inclusion in the

Copyright American Petroleum Institute
Reproduced by IHS under license with API
Document provided by IHS Licensee=TECNA/5935100001, 11/02/2004 06:04:35 MST
Questions or comments about this message: please call the Document Policy Group

vendor's original proposal. The vendor shall forward the lists to the purchaser promptly after receipt of the reviewed drawings and in time to permit order and delivery of the parts before field start-up. The transmittal letter shall include the data specified in 9.1.2.

9.3.5 Data manuals

9.3.5.1 General

The vendor shall provide sufficient written instructions and all necessary drawings to enable the purchaser to install, operate, and maintain all of the equipment covered by the purchase order. This information shall be compiled in a manual or manuals with a cover sheet showing the information listed in 9.1.2, an index sheet, and a complete list of the enclosed drawings by title and drawing number. The manual or manuals shall be prepared specifically for the equipment covered by the purchase order. Pre-printed sections that are model specific may be included, but "typical" manuals are unacceptable.

9.3.5.2 Installation manual

All information required for the proper installation of the equipment shall be compiled in a manual that shall be issued no later than the time of issue of final certified drawings. For this reason, it may be separate from the operating and maintenance instructions. This manual shall contain information on alignment and grouting procedures, normal and maximum utility requirements, centres of mass, rigging provisions and procedures, and all other installation data. All drawings and data specified in 9.2.2 and 9.2.3 that are pertinent to proper installation shall be included as part of this manual.

9.3.5.3 Manual for operating, maintenance and technical data

A manual containing operating, maintenance and technical data shall be sent at the time of shipment. In addition to covering operation at all specified process conditions, this manual shall include a section that provides special instructions for operation at specified extreme environmental conditions. The manual shall also include sketches that show the location of the centre of gravity and rigging provisions to permit the removal of the top half of the casings, rotors and any subassemblies having a mass greater than 135 kg (300 lb). As a minimum, the manual shall also include all of the data listed in Annex L that are not uniquely related to installation.

Copyright American Petroleum Institute
Reproduced by IHS under license with API
Document provided by IHS Licensee=TECNA/5935100001, 11/02/2004 06:04:35 MST
Questions or comments about this message: please call the Document Policy Group

Annex A
(informative)

Specific speed and suction-specific speed

Specific speed is calculated for the pump's performance at best efficiency point with the maximum diameter impeller. Specific speed is expressed mathematically by the following equation:

$$n_s = n(q)^{0,5} \Big/ (H)^{0,75} \tag{A.1}$$

where

n_s is the specific speed, dimensionless;

n is the rotational speed, expressed in revolutions per minute;

q is the total pump flowrate, expressed in cubic metres per second;

H is the head per stage, expressed in metres.

NOTE 1 Specific speed derived using SI units multiplied by a factor of 51,64 is equal to specific speed in USC units.

An alternative definition of specific speed is sometimes used (flowrate per impeller eye rather than total flowrate). The purchaser is cautioned to understand what is being referred to when comparing data.

Suction-specific speed is calculated for the pump's performance at best efficiency point with the maximum diameter impeller and provides an assessment of a pump's susceptibility to internal recirculation. It is expressed mathematically by the following equation:

$$S = n(q)^{0,5} \Big/ (NPSHR)^{0,75} \tag{A.2}$$

where

S is the suction-specific speed, dimensionless;

n is the rotational speed, expressed in revolutions per minute;

q is the flowrate per impeller eye, expressed in cubic metres per second;

equals the total flowrate for single-suction impellers,

equals one-half the total flowrate for double-suction impellers.

$NPSHR$ is the net positive suction head required, expressed in metres.

NOTE 2 Suction-specific speed derived using SI units multiplied by a factor of 51,64 is equal to suction-specific speed in USC units. The USC symbol N_{SS} is sometimes used to designate suction-specific speed.

Copyright American Petroleum Institute
Reproduced by IHS under license with API
Document provided by IHS Licensee=TECNA/5935100001, 11/02/2004 06:04:35 MST
Questions or comments about this message: please call the Document Policy Group

Annex B
(normative)

Cooling water and lubrication system schematics

This annex contains schematic diagrams for cooling water and lubrication systems. The notes and key to symbols in Figure B.2 through Figure B.10 are shown below in Figure B.1. These plans represent commonly used systems. Other configurations and systems are available and may be used if specified or if agreed upon by the purchaser and the vendor.

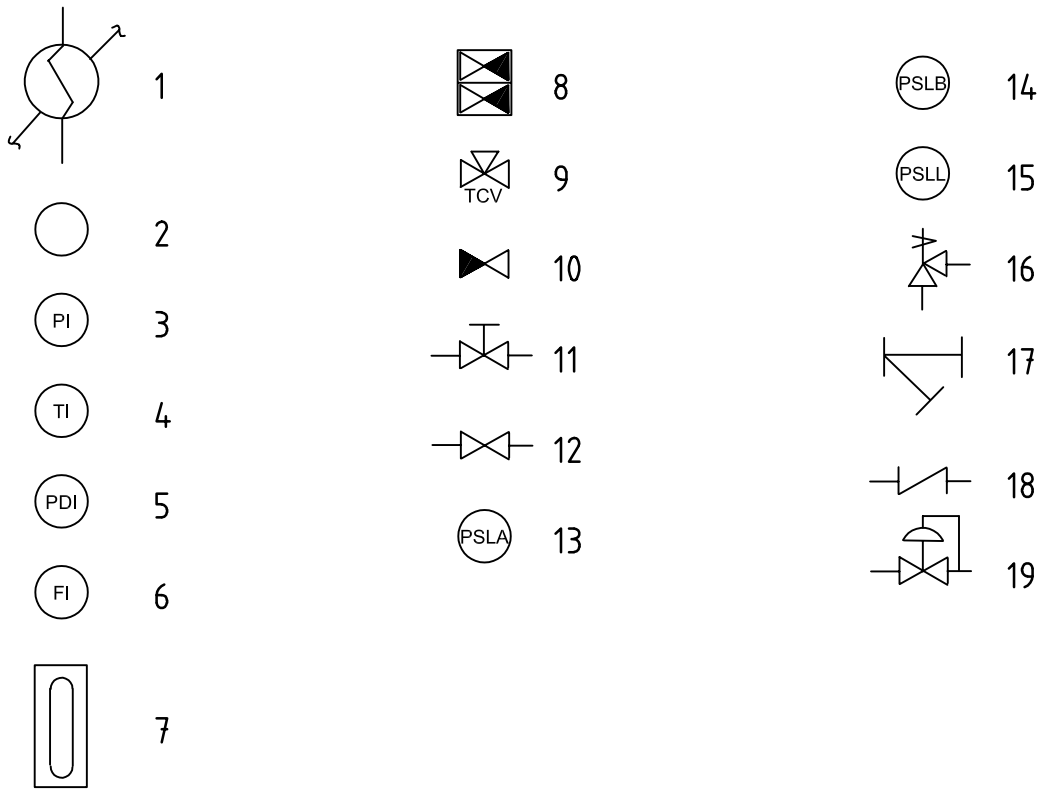

Key

1 heat exchanger
2 instrument (letters indicate function)
3 pressure indicator
4 temperature indicator
5 pressure differential indicator
6 flowrate indicator
7 reflex-type level indicator
8 manual 3-way valve (or single transfer valve)
9 temperature control valve
10 block and bleed valve
11 flow-regulating valve
12 block valve (gate valve)
13 low-pressure switch (auxiliary pump start)
14 low-pressure switch (alarm)
15 low-pressure switch (trip)
16 relief valve
17 line strainer
18 check valve
19 pressure control valve

Figure B.1 — Symbols used in drawings

Copyright American Petroleum Institute
Reproduced by IHS under license with API
Document provided by IHS Licensee=TECNA/5935100001, 11/02/2004 06:04:35 MST
Questions or comments about this message: please call the Document Policy Group

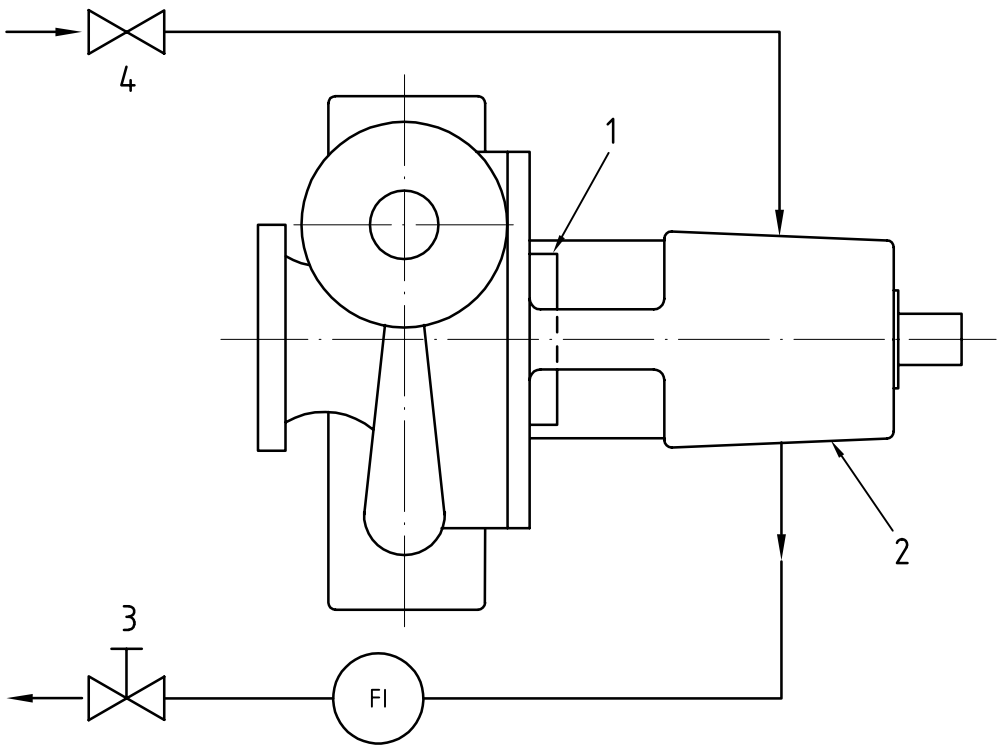

Key

1 gland

2 bearing housing

3 exit valve

4 inlet valve

Figure B.2 — Piping for overhung pumps — Plan A, cooling to bearing housing

Copyright American Petroleum Institute
Reproduced by IHS under license with API
Document provided by IHS Licensee=TECNA/5935100001, 11/02/2004 06:04:35 MST
Questions or comments about this message: please call the Document Policy Group

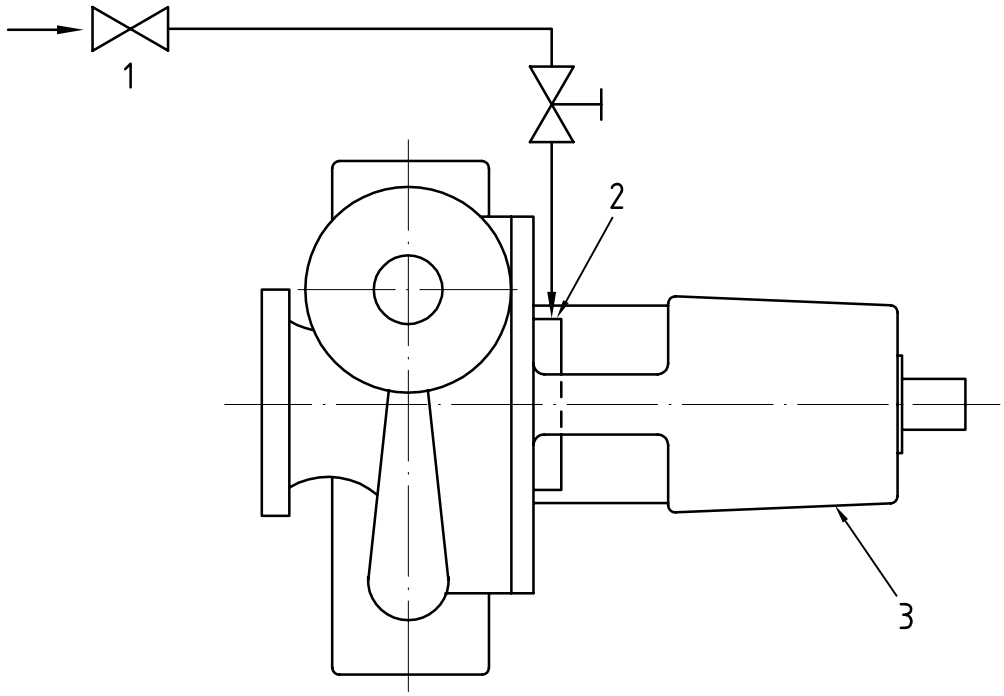

Key

1 inlet valve

2 gland

3 bearing housing

Figure B.3 — Piping for overhung pumps — Plan D, gland quench

--`,`,`,`,```,,,,`,,,,`,,,,,`,,`-`-`,,`,,`,`,,`---

Copyright American Petroleum Institute
Reproduced by IHS under license with API
Document provided by IHS Licensee=TECNA/5935100001, 11/02/2004 06:04:35 MST
Questions or comments about this message: please call the Document Policy Group

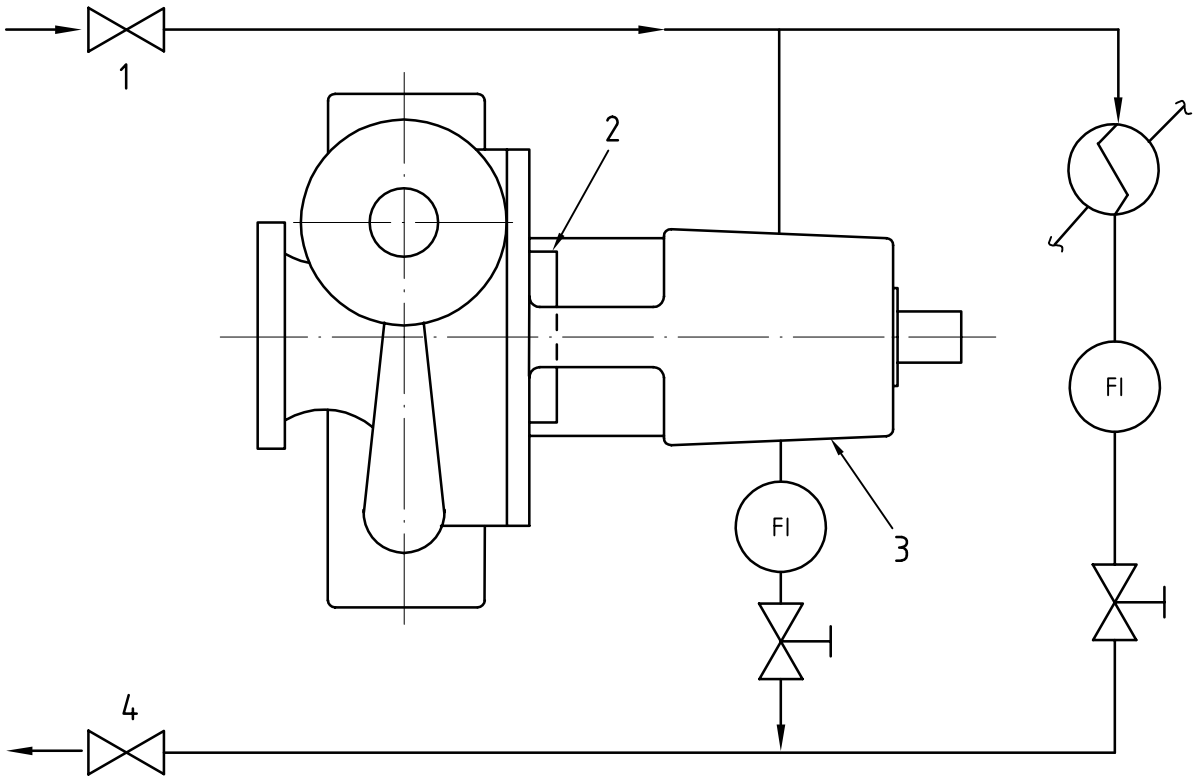

Key

1 inlet valve

2 gland

3 bearing housing

4 exit valve

Figure B.4 — Piping for overhung pumps — Plan K, cooling to bearing housing with parallel flow to seal heat exchanger

Copyright American Petroleum Institute
Reproduced by IHS under license with API
Document provided by IHS Licensee=TECNA/5935100001, 11/02/2004 06:04:35 MST
Questions or comments about this message: please call the Document Policy Group

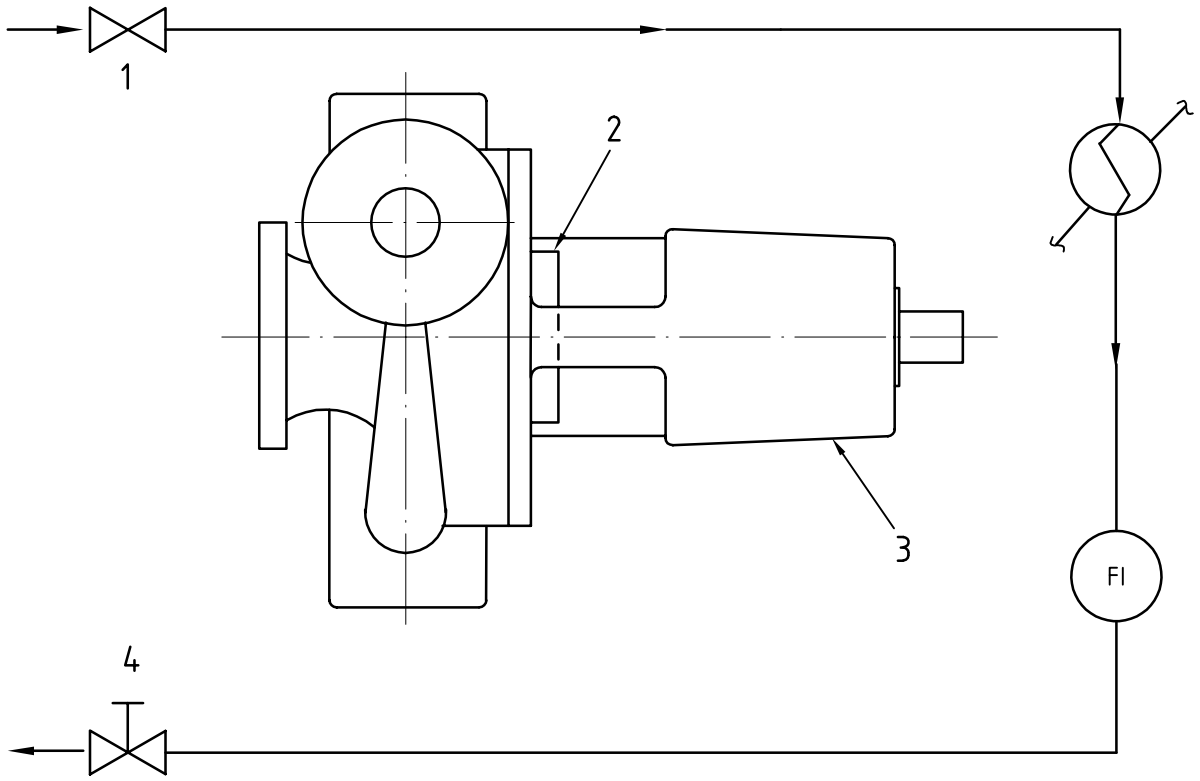

Key

1 inlet valve

2 gland

3 bearing housing

4 exit valve

Figure B.5 — Piping for overhung pumps — Plan M, cooling to seal heat exchanger

Copyright American Petroleum Institute
Reproduced by IHS under license with API
Document provided by IHS Licensee=TECNA/5935100001, 11/02/2004 06:04:35 MST
Questions or comments about this message: please call the Document Policy Group

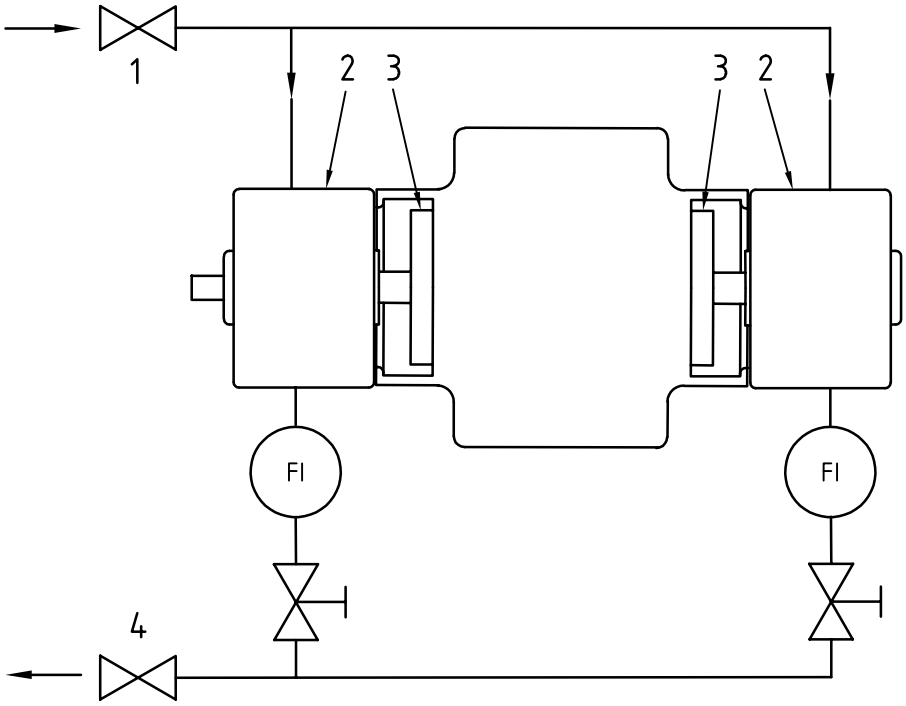

Key

1 inlet valve

2 bearing housing

3 gland

4 exit valve

Figure B.6 — Piping for between-bearing pumps — Plan A, cooling to bearing housings

Copyright American Petroleum Institute
Reproduced by IHS under license with API
Document provided by IHS Licensee=TECNA/5935100001, 11/02/2004 06:04:35 MST
Questions or comments about this message: please call the Document Policy Group

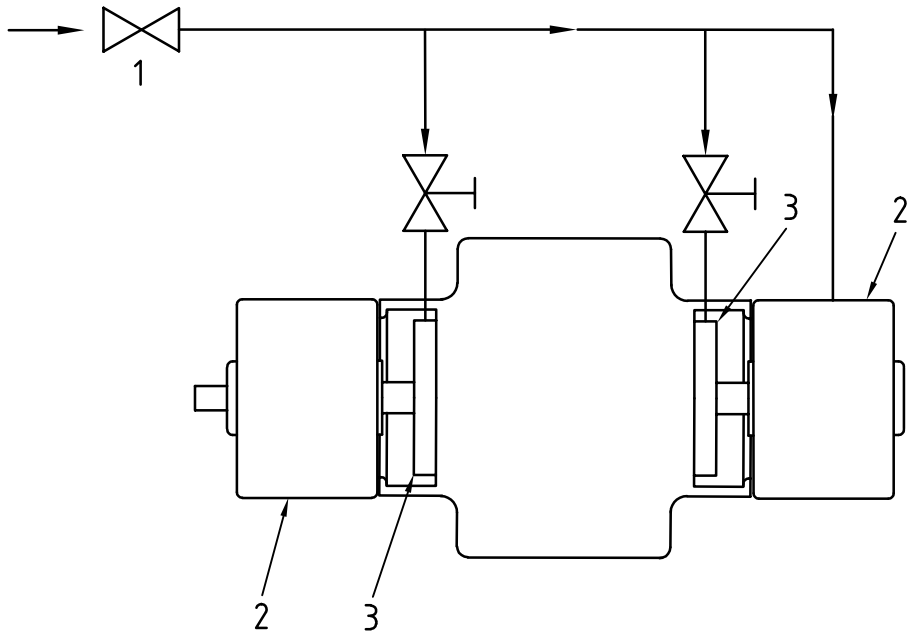

Key

1 inlet valve

2 bearing housing

3 gland

Figure B.7 — Piping for between-bearings pumps — Plan D, gland quench

Copyright American Petroleum Institute
Reproduced by IHS under license with API
Document provided by IHS Licensee=TECNA/5935100001, 11/02/2004 06:04:35 MST
Questions or comments about this message: please call the Document Policy Group

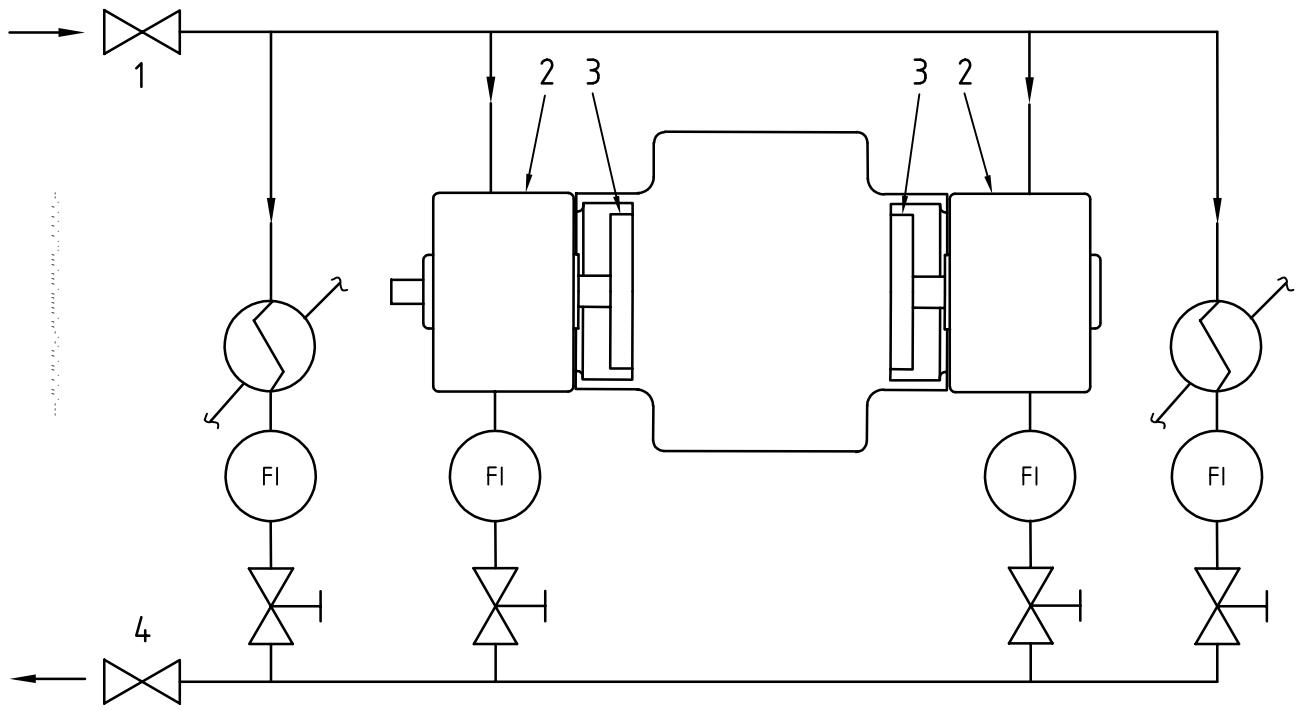

Key

1 inlet valve

2 bearing housing

3 gland

4 exit valve

Figure B.8 — Piping for between-bearing pumps — Plan K, cooling to bearing housings with parallel flow to seal heat exchangers

Copyright American Petroleum Institute
Reproduced by IHS under license with API
Document provided by IHS Licensee=TECNA/5935100001, 11/02/2004 06:04:35 MST
Questions or comments about this message: please call the Document Policy Group

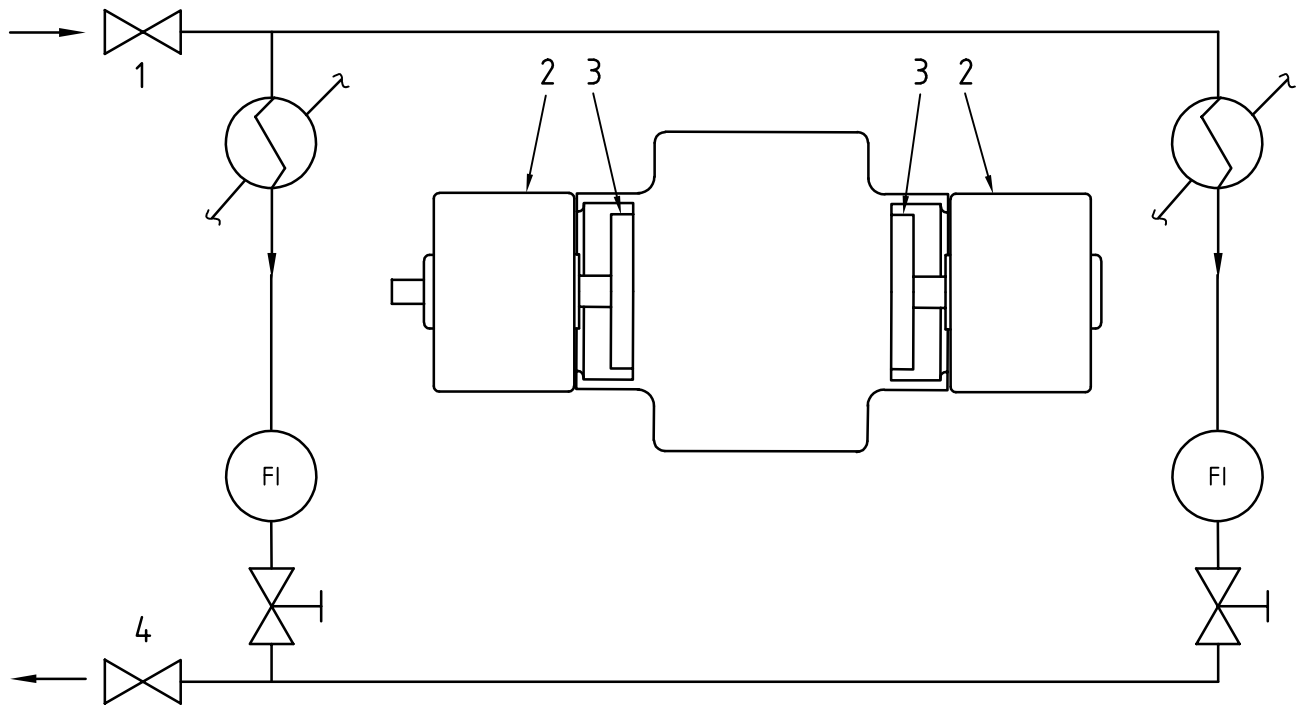

Key

1 inlet valve

2 bearing housing

3 gland

4 exit valve

Figure B.9 — Piping for between-bearing pumps — Plan M, cooling to seal heat exchangers

Copyright American Petroleum Institute
Reproduced by IHS under license with API
Document provided by IHS Licensee=TECNA/5935100001, 11/02/2004 06:04:35 MST
Questions or comments about this message: please call the Document Policy Group

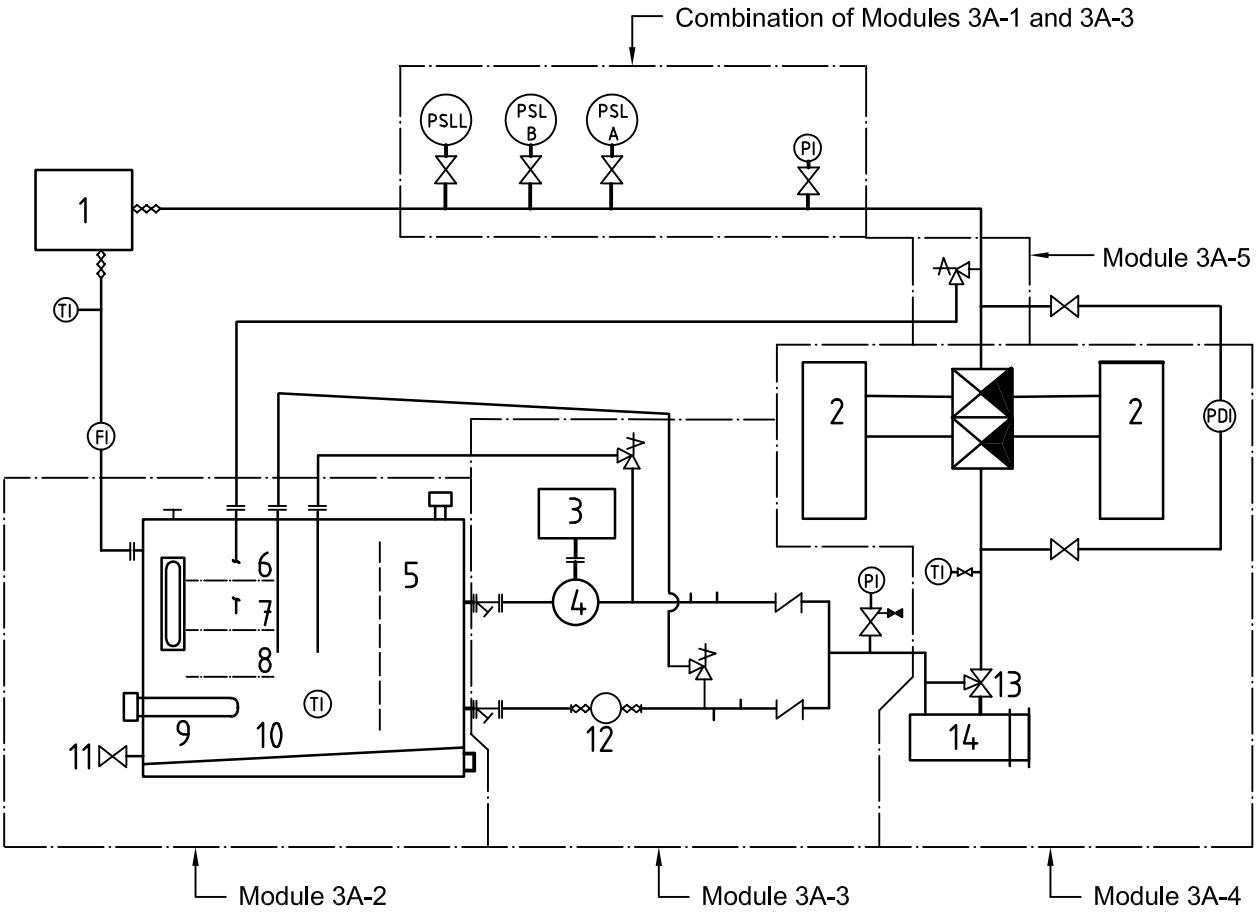

Key

1 rotating equipment
2 filter
3 electric motor
4 pump
5 internal baffle
6 max. operating level
7 min. operating level
8 pump suction level
9 heater (optional)
10 sloped bottom
11 drain
12 shaft-driven oil pump with integral pressure relief
13 TCV (optional)
14 cooler

NOTE See also Table B.1. The modules are further described in ISO 10438-3.

Figure B.10 — Lubricating-oil system schematic

Copyright American Petroleum Institute
Reproduced by IHS under license with API
Document provided by IHS Licensee=TECNA/5935100001, 11/02/2004 06:04:35 MST
Questions or comments about this message: please call the Document Policy Group

Table B.1 — Lubricating-oil system schematic

ISO 10438-3:— subclause	Note/Option [a]	Comments
3A-1 Minimum requirements for general purpose oil systems	Add	TI, FI on oil return lines from pump (and driver)
3A-2 Reservoir	Option 1	A level switch is not required
	Option 2	A temperature indicator with thermowell is required
	Option 3	An electric immersion or steam heater is optional
	Option 4	Additional connections are required for 1. Shaft-driven oil pump relief valve return (not required with integral relief valve) 2. Motor-driven oil pump relief valve return (not required with integral relief valve) 3. System PCV return 4. Aux. oil pump to have independent suction w/ strainer
	Option 5	One tapped grounding lug is required
	Option 6	Gauge glass may be armoured and extended
	Add	A vent (breather) with screen is required
	Add	The reservoir shall have a sloped bottom
	Add	A flanged drain connection with valve and blind at least 5 cm in size shall be included
	Add	A level glass shall be provided in accordance with ISO 10438-3
	Add	The return line from the system PCV shall be located below the minimum operating oil level.
3A-3 Pumps	Option 1	A 100% capacity motor-driven auxiliary pump is required
	Option 2	Block valves are not required
	Option 3	A pre/post-lubricating oil pump is not required
	Option 4	Pressure switches are required for low-pressure trip, alarm and aux. pump start
	Option 5	The pressure transmitter is not required
	Add	The pressure switches shall be located in accordance with ISO 10438-3:—, Figure A.5
3A-4 Pumps and coolers (and filters)	Option 1	One oil cooler is required
	Option 2	Duplex filters are required
	Option 3	A three-way constant temperature control valve with bypass line is optional
	Option 4	A two- or three-way variable temperature control valve with bypass line is not required
	Option 5	A temperature switch is required. Temperature switch is not represented in ISO 10438-3:—, Figure A.5.
	Option 6	A single transfer valve with cooler and filter in parallel with separate TCV is not required. Valve is not represented in ISO 10438-3:—, Figure A.5.
	Option 7	A pressure differential indicator is required
	Add Add	A single transfer valve for the duplex filters is required The replaceable filter shall be in accordance with ISO 10438-3
3A-5 Pressure control	Option 1	A pressure regulator (relief valve) is required
	Option 2	A back-pressure control valve; direct-acting is not required
	Option 3	Block valves around the PCV/regulator are not required
	Option 4	A globe bypass valve is not required

a "Option" means an optional item as specified;
"Add" means a requirement additional to those given in ISO 10438-3.

Copyright American Petroleum Institute
Reproduced by IHS under license with API
Document provided by IHS Licensee=TECNA/5935100001, 11/02/2004 06:04:35 MST
Questions or comments about this message: please call the Document Policy Group

Annex C
(normative)

Hydraulic power recovery turbines

C.1 General

This annex applies to hydraulic power recovery turbines (HPRTs).

Power recovery is generally achieved by the reduction of fluid pressure, sometimes with a contribution from vapour or gas evolution during the pressure reduction. A hydraulic power recovery turbine may be a pump operated with reverse flow.

C.2 Terminology

This International Standard uses terms that need to be changed or ignored when the standard is applied to HPRTs. The direction of flow through the HPRT is the reverse of that through the pump. In such a context, the word *pump* should be interpreted as meaning HPRT, the term *pump suction* should be interpreted as meaning the HPRT outlet, and the term *pump discharge* should be interpreted as meaning the HPRT inlet.

C.3 Design

C.3.1 Fluid characteristics

- **C.3.1.1** The purchaser shall advise the HPRT manufacturer whether any portion of the process stream entering the HPRT will flash to vapour and whether absorbed gas in the stream will evolve at any pressure less than the inlet pressure.

- **C.3.1.2** The purchaser shall specify the volume percentage of vapour or gas, or both, at the turbine outlet and the pressure and temperature at which the vapour will flash off.

C.3.1.3 If known, the fluid composition, and the liquid and vapour (or gas) density versus pressure, should also be specified. It may be necessary to control HPRT outlet pressure to limit the amount of fluid that will flash to vapour or the amount of gas coming out of solution.

C.3.2 Seal-flushing system

To avoid shortening seal life, consideration shall be given to evolution of gas and vaporization in seal-flushing streams. If this potential exists, a seal flush from other than the HPRT inlet is generally recommended.

C.3.3 Overspeed trip

C.3.3.1 An overspeed trip should be considered if the HPRT and other equipment in the train cannot tolerate the calculated runaway speed (the maximum speed reached by the HPRT when unloaded and subjected to the worst combination of specified inlet and outlet conditions). Typically, overspeed trips are set in the range of 115 % to 120 % of rated speed. It is important to realize that runaway speed with inlet liquids rich in absorbed gas or with liquids that partially flash as they flow through the HPRT can be several times higher than the runaway speed with water. With such liquids, the runaway speed cannot be accurately determined.

Copyright American Petroleum Institute
Reproduced by IHS under license with API
Document provided by IHS Licensee=TECNA/5935100001, 11/02/2004 06:04:35 MST
Questions or comments about this message: please call the Document Policy Group

C.3.3.2 The risk of overspeed is reduced if the driven equipment, such as a pump or fan, cannot realistically be expected to lose load. The risk is increased if the driven equipment is a generator, since a sudden disconnection from electric power circuits unloads the HPRT. In the latter case, automatic sensing and dummy-load switching should be provided.

C.3.3.3 Rotor systems that have low inertia and are subject to accidental unloading should be equipped with a quick-acting brake to prevent damage from overspeed.

C.3.4 Dual drivers

C.3.4.1 If an HPRT is used to assist another driver, the considerations in C.3.4.2 through C.3.4.5 apply.

C.3.4.2 The main driver should be rated to drive the train without assistance from the HPRT.

C.3.4.3 An overrunning clutch (that is, a clutch that transmits torque in one direction and freewheels in the other) should generally be used between the HPRT and the train to allow the driven equipment to operate during HPRT maintenance and to permit start-up of the train before the HPRT process stream is lined up.

C.3.4.4 Flow to the HPRT can vary widely and frequently. If the flow drops to about 40 % of the rated flow, the HPRT stops producing power and a drag can be imposed on the main driver. An overrunning clutch will prevent this drag.

C.3.4.5 The HPRT should never be placed between the main driver and the driven equipment.

C.3.5 Generators

If a generator is driven by an HPRT on a gas-rich process stream, the generator should be generously sized. The output power of HPRTs can be as much as 20 % to 30 % or more above that predicted by water tests, as a result of the effects of evolved gas or flashed liquid.

C.3.6 Throttle valves

For most applications, valves used to control flow to the HPRT should be placed upstream and near the inlet of the HPRT (see Figure C.1). Placement upstream allows the mechanical seals to operate at the outlet pressure of the HPRT and, for gas-rich streams, permits the gas to evolve, which increases the power output.

C.3.7 Bypass valves

Regardless of the arrangement of the HPRT train, a full-flow bypass valve with modulation capability should be installed. Common control of the modulating bypass valve and the HPRT inlet control valve is normally achieved by means of a split-level arrangement (see Figure C.1).

C.3.8 Relief valves

To protect the HPRT outlet casing integrity and mechanical seals from possible downstream back-pressure transients, a relief valve installed in the HPRT outlet piping circuit should be considered (see Figure C.1).

Copyright American Petroleum Institute
Reproduced by IHS under license with API
Document provided by IHS Licensee=TECNA/5935100001, 11/02/2004 06:04:35 MST
Questions or comments about this message: please call the Document Policy Group

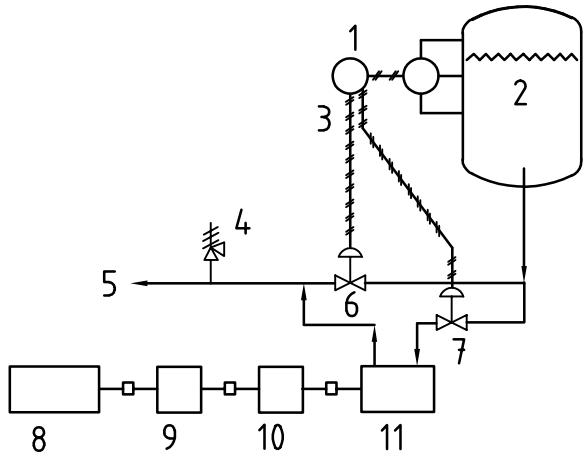

a) Pump drive

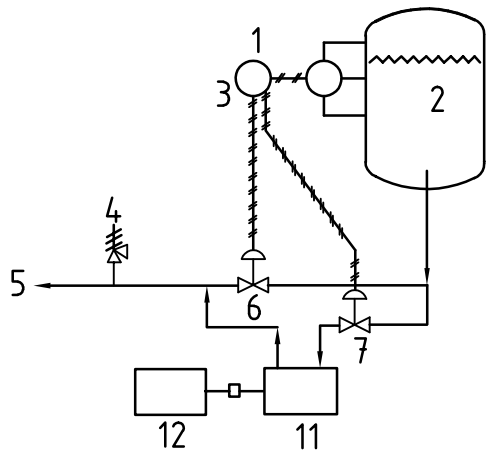

b) Generator drive

Key

1 level indicator, controller
2 high-pressure source
3 split range
4 relief valve
5 low-pressure destination
6 bypass
7 inlet throttle valve
8 pump
9 motor
10 overrunning clutch
11 HPRT
12 generator

Figure C.1 — Typical HPRT arrangements

Copyright American Petroleum Institute
Reproduced by IHS under license with API
Document provided by IHS Licensee=TECNA/5935100001, 11/02/2004 06:04:35 MST
Questions or comments about this message: please call the Document Policy Group

C.4 Testing

C.4.1 The HPRT should receive a performance test at the manufacturer's test facility. Hydraulic and mechanical performance guarantees shall be based on water testing.

C.4.2 Figure C.2 shows recommended test performance tolerances for HPRTs. The pump criteria given in the main body of this International Standard are not applicable.

C.4.3 Vibration levels for HPRTs should meet the criteria for pumps given in the main body of this International Standard.

C.4.4 It can be useful to verify the overspeed trip setting for the HPRT at the manufacturer's test facility. Determining the runaway speed during a water test may be considered, but this speed can be accurately calculated once performance with water is known. Runaway speed for gas-rich steams cannot be determined by water tests.

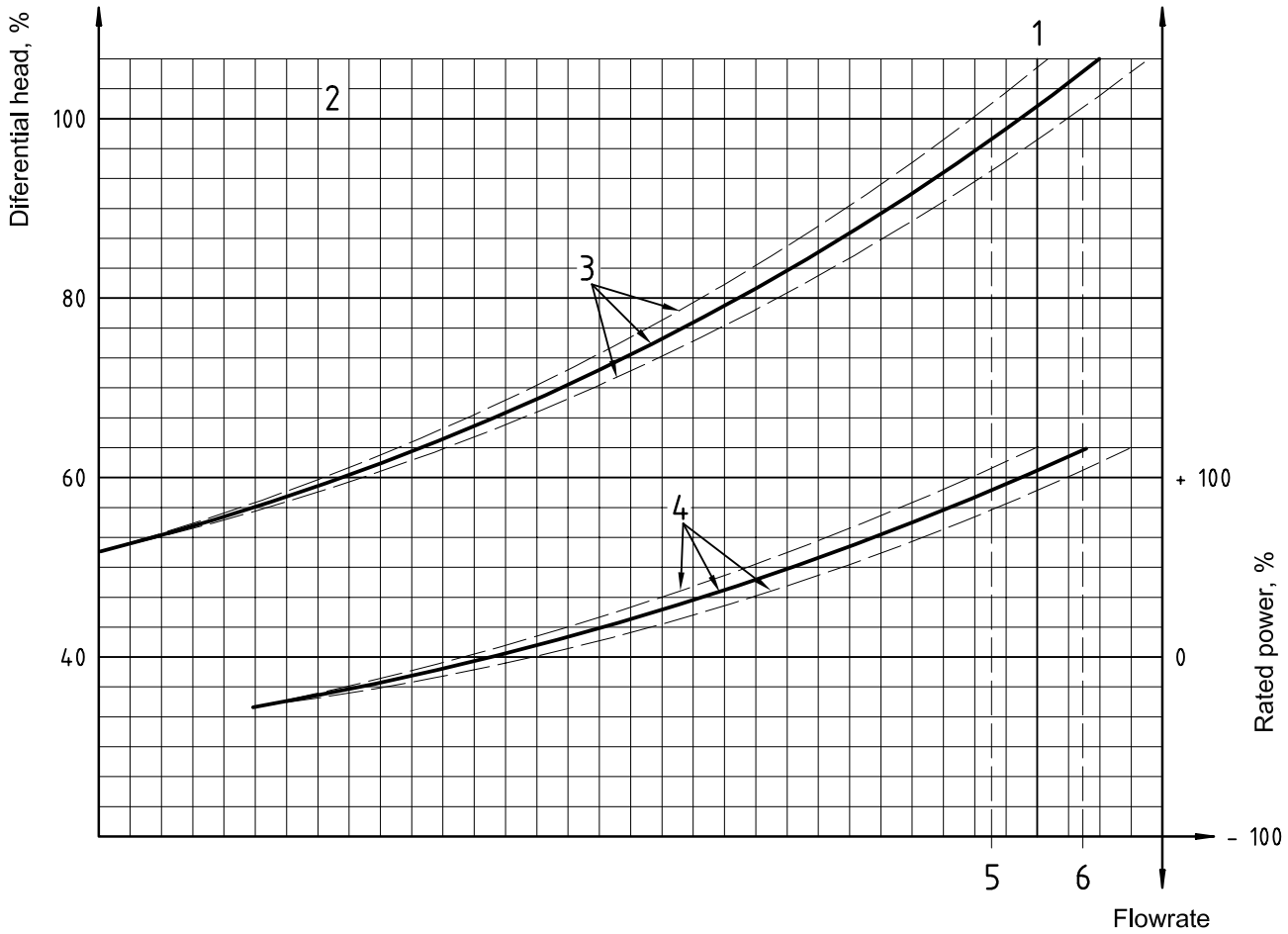

Key

1 rated flow

2 rated head

3 typical head vs. flowrate curve

4 typical power vs. flowrate curve

5 low-side tolerance (95 %)

6 high-side tolerance (105 %)

Figure C.2 — HPRT test performance tolerances

Copyright American Petroleum Institute
Reproduced by IHS under license with API
Document provided by IHS Licensee=TECNA/5935100001, 11/02/2004 06:04:35 MST
Questions or comments about this message: please call the Document Policy Group

Annex D
(normative)

Standard baseplates

Table D.1 — Dimensions of standard baseplates

Dimensions in millimetres (inches)

Baseplate number	Number of holes per side	l_1 ±13 (0,5)	l_2 ±25 (1,0)	l_3 ±3 (0,12)	l_4 ±3 (0,12)	l_5 ±3 (0,12)
0.5	3	760 (30,0)	1 230 (48,5)	465 (18,25)	465 (18,25)	685 (27,0)
1	3	760 (30,0)	1 535 (60,5)	615 (24,25)	615 (24,25)	685 (27,0)
1.5	3	760 (30,0)	1 840 (72,5)	770 (30,25)	770 (30,25)	685 (27,0)
2	4	760 (30,0)	2 145 (84,5)	920 (36,25)	615 (24,16)	685 (27,0)
2.5	3	915 (36,0)	1 535 (60,5)	615 (24,25)	615 (24,25)	840 (33,0)
3	3	915 (36,0)	1 840 (72,5)	770 (30,25)	770 (30,25)	840 (33,0)
3.5	4	915 (36,0)	2 145 (84,5)	920 (36,25)	615 (24,16)	840 (330)
4	4	915 (36,0)	2 450 (96,5)	1 075 (42,25)	715 (28,16)	840 (33,0)
5	3	1 065 (42,0)	1 840 (72,5)	770 (30,25)	770 (30,25)	990 (39,0)
5.5	4	1 065 (42,0)	2 145 (84,5)	920 (36,25)	615 (24,16)	990 (39,0)
6	4	1 065 (42,0)	2 450 (96,5)	1 075 (42,25)	715 (28,16)	990 (39,0)
6.5	5	1 065 (42,0)	2 755 (108,5)	1 225 (48,25)	615 (24,12)	990 (39,0)
7	4	1 245 (49,0)	2 145 (84,5)	920 (36,25)	615 (24,16)	1 170 (46,0)
7.5	4	1 245 (49,0)	2 450 (96,5)	1 075 (42,25)	715 (28,16)	1 170 (46,0)
8	5	1 245 (49,0)	2 755 (108,5)	1 225 (48,25)	615 (24,12)	1 170 (46,0)
9	4	1 395 (55,0)	2 145 (84,5)	920 (36,25)	615 (24,16)	1 320 (52,0)
9.5	4	1 395 (55,0)	2 450 (96,5)	1 075 (42,25)	715 (28,16)	1 320 (52,0)
10	5	1 395 (55,0)	2 755 (108,5)	1 225 (48,25)	615 (24,12)	1 320 (52,0)
11	4	1 550 (61,0)	2 145 (84,5)	920 (36,25)	615 (24,16)	1 475 (58,0)
11.5	4	1 550 (61,0)	2 450 (96,5)	1 075 (42,25)	715 (28,16)	1 475 (58,0)
12	5	1 550 (61,0)	2 755 (108,5)	1 225 (48,25)	615 (24,12)	1 475 (58,0)

NOTE See Figure D.1 for explanation of dimensions.

Copyright American Petroleum Institute
Reproduced by IHS under license with API
Document provided by IHS Licensee=TECNA/5935100001, 11/02/2004 06:04:35 MST
Questions or comments about this message: please call the Document Policy Group

Dimensions in millimetres (inches)

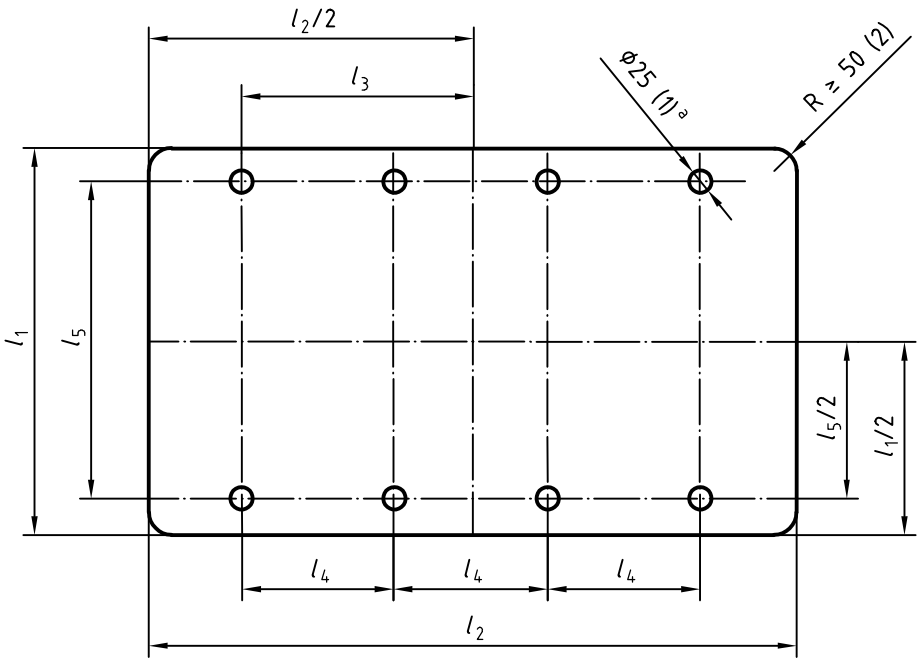

a For 20 mm (3/4 in) anchor bolts

Figure D.1 — Standard baseplate

Copyright American Petroleum Institute
Reproduced by IHS under license with API
Document provided by IHS Licensee=TECNA/5935100001, 11/02/2004 06:04:35 MST
Questions or comments about this message: please call the Document Policy Group

Annex E
(informative)

Inspector's checklist

The levels indicated in Table E.1 may be characterized as follows:

Level 1 is typically used for pumps in general services;

Level 2 comprises performance and material requirements and is more stringent than level 1;

Level 3 items should be considered for pumps in critical services.

The required inspection shall be indicated in the first column as:

— C: Certification only.

— O: Observed inspection.

— W: Witnessed inspection.

Table E.1 — Inspector's checklist

Inspection required C, O or W	Item	ISO 13709 subclause number	Date inspected	Inspected by	Status
	Level 1 - Basic				
	Casing marking (serial No.)	5.13.3			
	Motors and electrical components area classification	5.1.24			
	Casing jackscrews	5.3.13			
	Nozzle size, rating and finish [a]	Outline drawing, 5.4.1.1, 5.4.2			
	Baseplate requirements	6.3.1, 6.3.2, 6.3.3, 6.3.4, 6.3.7, 6.3.8, 6.3.9, 6.3.10, 6.3.11, 6.3.13, 6.3.14, 6.3.15, 6.3.17, 6.3.18			
	Certified hydrotest	7.3.2.1			
	Performance within tolerance (certified)	7.3.3.4 c)			
	NPSHR within tolerance (certified)	7.3.4.2.3			
	Vibration within tolerance	7.3.3.4 a)			
	Rotation arrow	5.13.4			
	Overall dimensions and connection locations [a]	Outline drawing			
	Anchor bolt layout and size [a]	Outline drawing			
	Auxiliary piping flow diagram	Annex B			
	Piping fabrication and installation	6.5.1			

Copyright American Petroleum Institute
Reproduced by IHS under license with API
Document provided by IHS Licensee=TECNA/5935100001, 11/02/2004 06:04:35 MST
Questions or comments about this message: please call the Document Policy Group

Table E.1 — Inspector's checklist (*continued*)

Inspection required C, O or W	Item	ISO 13709 subclause number	Date inspected	Inspected by	Status
	Equipment nameplate data	5.13.2			
	Restrained rotor	7.4.1			
	Storage preservation instructions	7.4.2			
	Rust prevention	7.4.3.4, 7.4.3.5, 7.4.3.10			
	Painting	7.4.3.3			
	Preparation for shipment	7.4.1, 7.4.3.6, 7.4.3.7			
	Shipping documents and tags	7.4.3.9, 7.4.4, 7.4.6			
	Level 2 – Intermediate (Add to Level 1)				
	Copies of subvendor purchase order				
	Material certification	5.12.1.8			
	Non-destructive examination (components)	5.12.1.5, 7.2.2.1			
	Hydrotest witnessed	7.3.2.1			
	Building records (runouts, clearances)	5.6.6, 5.6.8, 5.6.10, 5.6.13, 5.7.4, 8.2.2.4, 8.3.3.2, 8.3.4.2, 8.3.8.2.1, 8.3.12.2.d			
	Performance and NPSH tests Witnessed	7.3.3, 7.3.4.2			
	Level 3 - Special (Add to Levels 1 and 2)				
	Welding procedures approved	5.12.3.1			
	Welding repairs approved	5.12.3.2			
	Welding repair maps	None			
	Impeller/rotor balancing	5.9.4, 8.2.4.2			
	Bearing inspection after testing	8.2.7.5			
	Nozzle forces and moments test	6.3.6			
	Complete unit test	7.3.4.3			
	Sound level test	7.3.4.4			
	Auxiliary equipment test	7.3.4.5			
	Resonance test (bearing housing)	7.3.4.6, 8.3.9.2			

[a] Check against certified dimensional outline drawing

Copyright American Petroleum Institute
Reproduced by IHS under license with API
Document provided by IHS Licensee=TECNA/5935100001, 11/02/2004 06:04:35 MST
Questions or comments about this message: please call the Document Policy Group

Annex F
(normative)

Criteria for piping design

F.1 Horizontal pumps

F.1.1 Acceptable piping configurations should not cause excessive misalignment between the pump and driver. Piping configurations that produce component nozzle loads lying within the ranges specified in Table 4 limit casing distortion to one-half the pump vendor's design criterion (see 5.3.3) and ensure pump shaft displacement of less than 250 µm (0,010 in).

F.1.2 Piping configurations that produce loads outside the ranges specified in Table 4 are also acceptable without consultation with the pump vendor if the conditions specified in F.1.2 a) through F.1.2 c) below are satisfied. Satisfying these conditions ensures that any pump casing distortion will be within the vendor's design criteria (see 5.3.3) and that the displacement of the pump shaft will be less than 380 µm (0,015 in).

a) The individual component forces and moments acting on each pump nozzle flange shall not exceed the range specified in Table 4 (T4) by a factor of more than 2.

b) The resultant applied force (F_{RSA}, F_{RDA}) and the resultant applied moment (M_{RSA}, M_{RDA}) acting on each pump nozzle flange shall satisfy the appropriate interaction equations below.

$$[F_{RSA} / (1{,}5 \times F_{RST4})] + [M_{RSA} / (1{,}5 \times M_{RST4})] \leqslant 2 \quad \text{(F.1)}$$

$$[F_{RDA} / (1{,}5 \times F_{RDT4})] + [M_{RDA} / (1{,}5 \times M_{RDT4})] \leqslant 2 \quad \text{(F.2)}$$

c) The applied component forces and moments acting on each pump nozzle flange shall be translated to the centre of the pump. The magnitude of the resultant applied force (F_{RCA}), the resultant applied moment (M_{RCA}), and the applied moment shall be limited by Equation (F.3), Equation (F.4) and Equation (F.5) (the sign convention shown in Figure 20 through Figure 24 and the right-hand rule should be used in evaluating these equations).

$$F_{RCA} < 1{,}5\ (F_{RST4} + F_{RDT4}) \quad \text{(F.3)}$$

$$|\ M_{YCA}\ | < 2{,}0\ (M_{YST4} + M_{YDT4}) \quad \text{(F.4)}$$

$$M_{RCA} < 1{,}5\ (M_{RST4} + M_{RDT4}) \quad \text{(F.5)}$$

where

$$F_{RCA} = [(F_{XCA})^2 + (F_{YCA})^2 + (F_{ZCA})^2]^{0,5}$$

where

$$F_{XCA} = F_{XSA} + F_{XDA}$$

$$F_{YCA} = F_{YSA} + F_{YDA}$$

$$F_{ZCA} = F_{ZSA} + F_{ZDA}$$

Copyright American Petroleum Institute
Reproduced by IHS under license with API
Document provided by IHS Licensee=TECNA/5935100001, 11/02/2004 06:04:35 MST
Questions or comments about this message: please call the Document Policy Group

$$M_{RCA} = [(M_{XCA})^2 + (M_{YCA})^2 + (M_{ZCA})^2]^{0,5}$$

where

$$M_{XCA} = M_{XSA} + M_{XDA} - [(F_{YSA})(zS) + (F_{YDA})(zD) - (F_{ZSA})(yS) - (F_{ZDA})(yD)]/1\,000$$

$$M_{YCA} = M_{YSA} + M_{YDA} + [(F_{XSA})(zS) + (F_{XDA})(zD) - (F_{ZSA})(xS) - (F_{ZDA})(xD)]/1\,000$$

$$M_{ZCA} = M_{ZSA} + M_{ZDA} - [(F_{XSA})(yS) + (F_{XDA})(yD) - (F_{YSA})(xS) - (F_{YDA})(xD)]/1\,000$$

In USC units, the constant 1 000 shall be changed to 12. This constant is the conversion factor to change millimetres to metres or inches to feet.

F.1.3 Piping configurations that produce loads greater than those allowed in F.1.2 shall be approved by the purchaser and the vendor.

F.2 Vertical in-line pumps

Vertical in-line pumps that are supported only by the attached piping may be subjected to component piping loads that are more than double the values shown in Table 4 if these loads do not cause a principal stress greater than 41 N/mm^2 (5 950 psi) in either nozzle. For calculation purposes, the section properties of the pump nozzles shall be based on Schedule 40 pipe whose nominal size is equal to that of the appropriate pump nozzle. Equation (F.6), Equation (F.7), and Equation (F.8) can be used to evaluate principal stress, longitudinal stress and shear stress, respectively, in the nozzles.

For SI units, the following equations apply:

$$\sigma_p = (\sigma/2) + (\sigma^2/4 + \tau^2)^{0,5} < 41 \qquad \text{(F.6)}$$

$$\sigma_l = [1{,}27 \times F_Y / (D_o^2 - D_i^2)] + [10\,200 \times D_o (M_X^2 + M_Z^2)^{0,5}] / (D_o^4 - D_i^4) \qquad \text{(F.7)}$$

$$\tau = [1{,}27 \times (F_X^2 + F_Z^2)^{0,5}] / (D_o^2 - D_i^2) + [5\,100 \times D_o (|M_Y|)] / (D_o^4 - D_i^4) \qquad \text{(F.8)}$$

For USC units, the following equations apply:

$$\sigma_p = (\sigma/2) + (\sigma^2/4 + \tau^2)^{0,5} < 5\,950 \qquad \text{(F.9)}$$

$$\sigma_l = [1{,}27 \times F_Y / (D_o^2 - D_i^2)] + [122 \times D_o (M_X^2 + M_Z^2)^{0,5}] / (D_o^4 - D_i^4) \qquad \text{(F.10)}$$

$$\tau = [1{,}27 \times (F_X^2 + F_Z^2)^{0,5}] / (D_o^2 - D_i^2) + [61 \times D_o (|M_Y|)] / (D_o^4 - D_i^4) \qquad \text{(F.11)}$$

where

σ_p is the principal stress, expressed in MPa (lbf/in^2);

σ_l is the longitudinal stress, expressed in MPa (lbf/in^2);

τ is the shear stress, expressed in MPa (lbf/in^2);

F_X is the applied force on the X axis;

F_Y is the applied force on the Y axis;

F_Z is the applied force on the Z axis;

M_X is the applied moment on the X axis;

Copyright American Petroleum Institute
Reproduced by IHS under license with API
Document provided by IHS Licensee=TECNA/5935100001, 11/02/2004 06:04:35 MST
Questions or comments about this message: please call the Document Policy Group

M_Y is the applied moment on the Y axis;

M_Z is the applied moment on the Z axis;

D_i, D_o are the inner and outer diameters of the nozzles, expressed in millimetres (inches).

F_X, F_Y, F_Z, M_X, M_Y, and M_Z represent the applied loads acting on the suction or discharge nozzles; thus, subscripts S_A and D_A have been omitted to simplify the equations. The sign of F_Y is positive if the load puts the nozzle in tension; the sign is negative if the load puts the nozzle in compression. One should refer to Figure 20 and the applied nozzle loads to determine whether the nozzle is in tension or compression. The absolute value of M_Y should be used in Equations (F.8) to (F.11).

F.3 Nomenclature

The following definitions apply to the sample problems in F.4

where

C is the centre of the pump. For pump types OH2 and BB2 with two support pedestals, the centre is defined by the intersection of the pump shaft centreline and a vertical plane passing through the centre of the two pedestals (see Figure 23 and Figure 24). For pump types BB1, BB3, BB4 and BB5 with four support pedestals, the centre is defined by the intersection of the pump shaft centreline and a vertical plane passing midway between the four pedestals (see Figure 22);

D is the discharge nozzle;

D_i is the inside diameter of Schedule 40 pipe whose nominal size is equal to that of the pump nozzle in question, expressed in millimetres (inches);

D_o is the outside diameter of Schedule 40 pipe whose nominal size is equal to that of the pump nozzle in question, expressed in millimetres (inches);

F is the force, expressed in newtons (pounds force);

F_R is the resultant force. (F_{RSA} and F_{RDA} are calculated by the square root of the sum of the squares method using the applied component forces acting on the nozzle flange. F_{RST4} and F_{RDT4} are extracted from Table 4, using the appropriate nozzle size);

M is the moment, expressed in newton metres (foot-pounds force);

M_R is the resultant moment. (M_{RSA} and M_{RDA} are calculated by the square root of the squares method using the applied component moments acting on the nozzle flange. M_{RST4} and M_{RDT4} are extracted from Table 4 using the appropriate nozzle size);

σ_p is the principal stress, expressed in megapascals (pounds force per square inch);

σ_l is the longitudinal stress, expressed in newtons per square millimetre (pounds per square inch);

τ is the shear stress, expressed in newtons per square millimetre (pounds per square inch);

S is the suction nozzle;

x, y, z are the location coordinates of the nozzle flanges with respect to the centre of the pump, expressed in millimetres (inches);

X, Y, Z are the directions of the load (see Figures 20 to 24);

Copyright American Petroleum Institute
Reproduced by IHS under license with API
Document provided by IHS Licensee=TECNA/5935100001, 11/02/2004 06:04:35 MST
Questions or comments about this message: please call the Document Policy Group

Subscript A is an applied load;

Subscript T4 is a load extracted from Table 4.

F.4 Sample problems

F.4.1 Example 1A (SI units)

F.4.1.1 Problem

For an overhung-end suction process pump (OH2), the nozzle sizes and location coordinates are as given in Table F.1. The applied nozzle loadings are as given in Table F.2. The problem is to determine whether the conditions specified in F.1.2 a), F.1.2 b) and F.1.2 c) are satisfied.

F.4.1.2 Solution

F.4.1.2.1 A check of condition F.1.2 a) is as follows.

For the DN 250 end suction nozzle,

$$|F_{XSA} / F_{XST4}| = |+ 12\,900 / 6\,670| = 1,93 < 2,00$$

$$|F_{YSA} / F_{YST4}| = |0 / 5\,340| = 0 < 2,00$$

$$|F_{ZSA} / F_{ZST4}| = |- 8\,852 / 4\,450| = 1,99 < 2,00$$

$$|M_{XSA} / M_{XST4}| = |- 1\,356 / 5\,020| = 0,27 < 2,00$$

$$|M_{YSA} / M_{YST4}| = |- 5\,017 / 2\,440| = 2,06 > 2,00$$

$$|M_{ZSA} / M_{ZST4}| = |- 7\,458 / 3\,800| = 1,96 < 2,00$$

Since M_{YSA} exceeds the value specified in Table 4 (SI units) by more than a factor of 2, it is not satisfactory. Assume that M_{YSA} can be reduced to – 4 879. Then,

$$|M_{YSA} / M_{YST4}| = |- 4\,879 / 2\,440| = 1,999 < 2,00$$

For the DN 200 top discharge nozzle,

$$|F_{XDA} / F_{XDT4}| = |+ 7\,117 / 3\,780| = 1,88 < 2,00$$

$$|F_{YDA} / F_{YDT4}| = |- 445 / 3\,110| = 0,14 < 2,00$$

$$|F_{ZDA} / F_{ZDT4}| = |+ 8\,674 / 4\,890| = 1,77 < 2,00$$

$$|M_{XDA} / M_{XDT4}| = |+ 678 / 3\,530| = 0,19 < 2,00$$

$$|M_{YDA} / M_{YDT4}| = |- 3\,390 / 1\,760| = 1,93 < 2,00$$

$$|M_{ZDA} / M_{ZDT4}| = |- 4\,882 / 2\,580| = 1,89 < 2,00$$

Provided that M_{YSA} can be reduced to – 4 879, the applied piping loads acting on each nozzle satisfy the condition specified in F.1.2 a).

Copyright American Petroleum Institute
Reproduced by IHS under license with API
Document provided by IHS Licensee=TECNA/5935100001, 11/02/2004 06:04:35 MST
Questions or comments about this message: please call the Document Policy Group

Table F.1 — Nozzle sizes and location coordinates for Example 1A

Nozzle	Size DN	x mm	y mm	z mm
Suction	250	+ 267	0	0
Discharge	200	0	– 311	+ 381

Table F.2 — Applied nozzle loadings for Example 1A

Force	Value N	Moment	Value N·m
		Suction	
F_{XSA}	+ 12 900	M_{XSA}	– 1 356
F_{YSA}	0	M_{YSA}	– 5 017 [a]
F_{ZSA}	– 8 852	M_{ZSA}	– 7 458
		Discharge	
F_{XDA}	+ 7 117	M_{XDA}	+ 678
F_{YDA}	– 445	M_{YDA}	– 3 390
F_{ZDA}	+ 8 674	M_{ZDA}	– 4 882

[a] See F.4.1.2.1.

F.4.1.2.2 A check of condition F.1.2 b) is as follows:

For the suction nozzle, F_{RSA} and M_{RSA} are determined using the square root of the sum of the squares method:

$$F_{RSA} = [(F_{XSA})^2 + (F_{YSA})^2 + (F_{ZSA})^2]^{0,5} = [(+\ 12\ 900)^2 + (0)^2 + (-\ 8\ 852)^2]^{0,5} = 15\ 645$$

$$M_{RSA} = [(M_{XSA})^2 + (M_{YSA})^2 + (M_{ZSA})^2]^{0,5} = [(-\ 1\ 356)^2 + (-\ 4\ 879)^2 + (-\ 7\ 458)^2]^{0,5} = 9\ 015$$

Referring to Equation (F.1):

$$F_{RSA} /(1{,}5 \times F_{RST4}) + M_{RSA} /(1{,}5 \times M_{RST4}) \leqslant 2$$

$$15\ 645 /(1{,}5 \times 9\ 630) + 9\ 015 /(1{,}5 \times 6\ 750) \leqslant 2$$

$$1{,}96 < 2$$

For the discharge nozzle, F_{RDA} and M_{RDA} are determined by the same method used to find F_{RSA} and M_{RSA}:

$$F_{RDA} = [(F_{XDA})^2 + (F_{YDA})^2 + (F_{ZDA})^2]^{0,5} = [(+\ 7\ 117)^2 + (-\ 445)^2 + (+\ 8\ 674)^2]^{0,5} = 11\ 229$$

$$M_{RDA} = [(M_{XDA})^2 + (M_{YDA})^2 + (M_{ZDA})^2]^{0,5} = [(+\ 678)^2 + (-\ 3\ 390)^2 + (-\ 4\ 882)^2]^{0,5} = 5\ 982$$

Referring to Equation (F.2):

$$F_{RDA} /(1{,}5 \times F_{RDT4}) + M_{RDA} /(1{,}5 \times M_{RDT4}) \leqslant 2$$

$$11\ 229 / (1{,}5 \times 6\ 920) + 5\ 982 / (1{,}5 \times 4\ 710) \leqslant 2$$

$$1{,}93 < 2$$

Copyright American Petroleum Institute
Reproduced by IHS under license with API
Document provided by IHS Licensee=TECNA/5935100001, 11/02/2004 06:04:35 MST
Questions or comments about this message: please call the Document Policy Group

The loads acting on each nozzle satisfy the appropriate interaction equation, so the condition specified in F.1.2 b) is satisfied.

F.4.1.2.3 A check of condition F.1.2 c) is as follows:

To check this condition, the applied component forces and moments are translated and resolved to the centre of the pump. F_{RCA} is determined as follows [see F.1.2 c)]:

$$F_{XCA} = F_{XSA} + F_{XDA}$$

$$F_{YCA} = F_{YSA} + F_{YDA}$$

$$F_{ZCA} = F_{ZSA} + F_{ZDA}$$

$$F_{RCA} = [(F_{XCA})^2 + (F_{YCA})^2 + (F_{ZCA})^2]^{0,5}$$

$$F_{XCA} = (+\ 12\ 900) + (+\ 7\ 117) = +\ 20\ 017$$

$$F_{YCA} = (0) + (-\ 445) = -\ 445$$

$$F_{ZCA} = (-\ 8\ 852) + (+\ 8\ 674) = -\ 178$$

$$F_{RCA} = [(+\ 20\ 017)^2 + (-\ 445)^2 + (-\ 178)^2]^{0,5} = 20\ 023$$

Referring to Equation (F.3):

$$F_{RCA} < 1,5 \times (F_{RST4} + F_{RDT4})$$

$$20\ 023 < 1,5 \times (9\ 630 + 6\ 920)$$

$$20\ 023 < 24\ 825$$

M_{YCA} is determined as follows [see F.1.2 c)]:

$$M_{YCA} = M_{YSA} + M_{YDA} + [(F_{XSA})\ (zS) + (F_{XDA})\ (zD) - (F_{ZSA})(xS) - (F_{ZDA})\ (xD)]\ /\ 1\ 000$$

$$= (-\ 4\ 879) + (-\ 3\ 390) + [(+\ 12\ 900)\ (0,00) + (+\ 7\ 117)\ (+\ 381) - (-\ 8\ 852)(+\ 267) - (+\ 8\ 674)(0,00)]/1\ 000$$

$$= -\ 3\ 194$$

Referring to Equation (F.4):

$$|\ M_{YCA}\ | < 2,0\ (M_{YST4} + M_{YDT4})$$

$$|\ -\ 3\ 194\ | < 2,0\ (2\ 440 + 1\ 760)$$

$$3\ 194 < 8\ 400$$

M_{RCA} is determined as follows [see F.1.2 c)]:

$$M_{XCA} = M_{XSA} + M_{XDA} - [(F_{YSA})\ (zS) + (F_{YDA})\ (zD) - (F_{ZSA})\ (yS) - (F_{ZDA})\ (yD)]\ /\ 1\ 000$$

$$M_{YCA} = M_{YSA} + M_{YDA} + [(F_{XSA})\ (zS) + (F_{XDA})\ (zD) - (F_{ZSA})(xS) - (F_{ZDA})\ (xD)]\ /\ 1\ 000$$

$$M_{ZCA} = M_{ZSA} + M_{ZDA} - [(F_{XSA})\ (yS) + (F_{XDA})\ (yD) - (F_{YSA})\ (xS) - (F_{YDA})\ (xD)]\ /\ 1\ 000$$

Copyright American Petroleum Institute
Reproduced by IHS under license with API
Document provided by IHS Licensee=TECNA/5935100001, 11/02/2004 06:04:35 MST
Questions or comments about this message: please call the Document Policy Group

M_{RCA} = $[(M_{XCA})^2 + (M_{YCA})^2 + (M_{ZCA})^2]^{0,5}$

M_{XCA} = (– 1 356) + (+ 678) – [(0) (0,00) + (– 445)(+ 381) – (– 8 852) (0,00) – (+ 8 674)(– 311)] / 1 000

= – 3 206

M_{YCA} = – 3 194 (see previous calculation)

M_{ZCA} = (– 7 458) + (– 4 882) – [(+ 12 900)(0,00) + (+ 7 117) (– 311) – (0)(+ 267) – (– 445)(0,00)] / 1 000

= – 10 127

M_{RCA} = $[(-3\,206)^2 + (-3\,194)^2 + (-10\,127)^2]^{0,5}$ = 11 092

Referring to Equation (F.5):

$M_{RCA} < 1,5 \times (M_{RST4} + M_{RDT4})$

11 092 < 1,5 × (6 750 + 4 710)

11 092 < 17 190

Thus, all the requirements of F.1.2 c) have been satisfied.

F.4.2 Example 2A (SI units)

F.4.2.1 Problem

For a DN 80 × DN 100 × 178 mm vertical in-line pump (OH3 through OH6), the proposed applied nozzle loadings are as given in Table F.3. By inspection, F_{ZSA}, M_{ZSA}, and M_{XDA} are greater than two times the values shown in Table 4 (SI units). As stated in F.2, these component loads are acceptable provided that the calculated principal stress is less than 41 MPa. The problem is to determine the principal stress for the suction nozzle and the discharge nozzle.

Table F.3 — Proposed applied nozzle loadings for Example 2A

Force	Value N	Moment	Value N·m
		DN 100 suction	
F_{XSA}	– 2 224	M_{XSA}	+ 136
F_{YSA}	– 5 338	M_{YSA}	– 2 034
F_{ZSA}	+ 1 334	M_{ZSA}	+ 1 356
		DN 80 discharge	
F_{XDA}	+ 1 334	M_{XDA}	+ 2 712
F_{YDA}	– 2 224	M_{YDA}	+ 271
F_{ZDA}	+ 445	M_{ZDA}	+ 136

Copyright American Petroleum Institute
Reproduced by IHS under license with API
Document provided by IHS Licensee=TECNA/5935100001, 11/02/2004 06:04:35 MST
Questions or comments about this message: please call the Document Policy Group

F.4.2.2 Solution

F.4.2.2.1 Suction nozzle calculations are as follows:

For Schedule 40 pipe with a nominal size of DN 100, D_o = 114 mm and D_i = 102 mm. Therefore,

$$D_o^2 - D_i^2 = (114)^2 - (102)^2 = 2\,592$$

$$D_o^4 - D_i^4 = (114)^4 - (102)^4 = 6{,}065 \times 10^7$$

$$[(F_{XSA})^2 + (F_{ZSA})^2]^{0,5} = [(-\,2\,224)^2 + (+\,1\,334)^2]^{0,5} = 2\,593$$

$$[(M_{XSA})^2 + (M_{ZSA})^2]^{0,5} = [(+\,136)^2 + (+\,1\,356)^2]^{0,5} = 1\,363$$

Equation (F.7) is used to determine the longitudinal stress for the suction nozzle, σ_s.

The applied F_{YSA} load acting on the suction nozzle is in the negative Y direction and produces a compressive stress; therefore, the negative sign on F_{YSA} is used.

$$\sigma_s = [1{,}27 \times F_{YSA} / (D_o^2 - D_i^2)] + [10\,200 \times D_o\,(M_{XSA}^2 + M_{ZSA}^2)^{0,5} / (D_o^4 - D_i^4)]$$

$$= [1{,}27 \times (-\,5\,338) / 2\,592] + [10\,200 \times 114 \times 1\,363 / (6{,}065 \times 10^7)] = 23{,}52$$

Equation (F.8) is used to determine the shear stress for the suction nozzle, τ_s.

$$\tau_s = [1{,}27(F_{XSA})^2 + (F_{ZSA})^2]^{0,5} / (D_o^2 - D_i^2)] + [0{,}51 \times 10^4 D_o\,(\,|M_{YSA}|\,)] / (D_o^4 - D_i^4)$$

$$= (1{,}27 \times 2\,593 / 2\,592) + [5\,100 \times 114 \times (|-\,2\,034|)] / (6{,}065 \times 10^7)] = 20{,}77$$

The principal stress for the suction nozzle, $\sigma_{p,s}$, is calculated using Equation (F.6):

$$\sigma_{p,s} = (\sigma_s / 2) + (\sigma_s^2 / 4 + \tau_s^2)^{0,5} < 41$$

$$= (+\,23{,}52 / 2) + [(+\,23{,}52)^2 / 4 + (+\,20{,}77)^2]^{0,5} < 41$$

$$= +\,35{,}63 < 41$$

Thus, the suction nozzle loads are satisfactory.

F.4.2.2.2 Discharge nozzle calculations are as follows:

For Schedule 40 pipe with a nominal size of 80 mm, D_o = 89 mm and D_i = 78 mm. Therefore,

$$D_o^2 - D_i^2 = (89)^2 - (78)^2 = 1\,837$$

$$D_o^4 - D_i^4 = (89)^4 - (78)^4 = 2{,}573 \times 10^7$$

$$[(F_{XDA})^2 + (F_{ZDA})^2]^{0,5} = [(+1\,334)^2 + (+\,445)^2]^{0,5} = 1\,406$$

$$[(M_{XDA})^2 + (M_{ZDA})^2]^{0,5} = [(+2\,712)^2 + (+\,136)^2]^{0,5} = 2\,715$$

Equation (F.7) is used to determine the longitudinal stress for the discharge nozzle, σ_D.

Copyright American Petroleum Institute
Reproduced by IHS under license with API
Document provided by IHS Licensee=TECNA/5935100001, 11/02/2004 06:04:35 MST
Questions or comments about this message: please call the Document Policy Group

The applied F_{YDA} load acting on the discharge nozzle is in the negative Y direction and produces a tensile stress; therefore, a positive sign on F_{YDA} is used.

$$\sigma_D = [1{,}27\ F_{YDA} / (D_o^2 - D_i^2)] + [10\ 200\ D_o\ (M_{XDA}^2 + M_{ZDA}^2)^{0,5}] / (D_o^4 - D_i^4)$$

$$= [1{,}27(+\ 2\ 224) / 1\ 837] + [10\ 200\ (89)\ (2\ 715)] / 2{,}573 \times 10^7 = 97{,}33$$

Equation (F.8) is used to determine the shear stress for the discharge nozzle, τ_D.

$$\tau_D = [1{,}27(F_{XDA})^2 + (F_{ZDA})^2]^{0,5} / (D_o^2 - D_i^2)] + [5\ 100\ D_o\ (\ |M_{YDA}|\ )] / (D_o^4 - D_i^4)$$

$$= [1{,}27 \times 1\ 406 / 1\ 837] + [5\ 100 \times 89 \times (+\ 271\ |) / (2{,}573 \times 10^7)] = 5{,}75$$

The principal stress for the discharge nozzle, $\sigma_{p,D}$, is calculated using Equation (F.6):

$$\sigma_{p,D} = (\sigma_D/2) + (\sigma_D^2/4 + \tau_D^2)^{0,5} < 41$$

$$= (+\ 97{,}33/2) + [(+\ 97{,}33)^2/\ 4 + (+5{,}75)^2]^{0,5}$$

$$= +\ 97{,}67 > 41$$

Thus, the discharge nozzle loads are too large. By inspection, if M_{XDA} is reduced by 50 % to 1 356 N·m, the resulting principal stress will still exceed 41 MPa. Therefore, the maximum value for M_{XDA} is twice M_{XDT4}, or 1 900 N·m.

F.4.3 Example 1B (US Customary units)

F.4.3.1 Problem

For an overhung end-suction process pump (OH2), the nozzle sizes and location coordinates are as given in Table F.4. The applied nozzle loadings are as given in Table F.5. The problem is to determine whether the conditions specified in F.1.2 a), F.1.2 b), and F.1.2 c) are satisfied.

Table F.4 — Nozzle sizes and location coordinates for Example 1B

Dimensions in inches

Nozzle	Size	x	y	z
Suction	10	+ 10,50	0	0
Discharge	8	0	– 12,25	+ 15

Copyright American Petroleum Institute
Reproduced by IHS under license with API
Document provided by IHS Licensee=TECNA/5935100001, 11/02/2004 06:04:35 MST
Questions or comments about this message: please call the Document Policy Group

Table F.5 — Applied nozzle loadings for Example 1B

Force	Value lbf	Moment	Value ft·lbf
		Suction	
F_{XSA}	+ 2 900	M_{XSA}	– 1 000
F_{YSA}	0	M_{YSA}	– 3 700 [a]
F_{ZSA}	– 1 990	M_{ZSA}	– 5 500
		Discharge	
F_{XDA}	+ 1 600	M_{XDA}	+ 500
F_{YDA}	– 100	M_{YDA}	– 2 500
F_{ZDA}	+ 1 950	M_{ZDA}	– 3 600

[a] See F.4.1.2.1

F.4.3.2 Solution

F.4.3.2.1 A check of condition of F.1.2 a) is as follows:

For the 10-inch end suction nozzle,

$$|F_{XSA}/F_{XST4}| = |+ 2\,900/1\,500| = 1{,}93 < 2{,}00$$

$$|F_{YSA}/F_{YST4}| = |0/1\,200| = 0 < 2{,}00$$

$$|F_{ZSA}/F_{ZST4}| = |- 1\,990/1\,000| = 1{,}99 < 2{,}00$$

$$|M_{XSA}/M_{XST4}| = |- 1\,000/3\,700| = 0{,}27 < 2{,}00$$

$$|M_{YSA}/M_{YST4}| = |- 3\,700/1\,800| = 2{,}06 > 2{,}00$$

$$|M_{ZSA}/M_{ZST4}| = |- 5\,500/2\,800| = 1{,}96 < 2{,}00$$

Since M_{YSA} exceeds the value specified in Table 4 (US Customary units) by more than a factor of 2, it is not satisfactory. Assume that M_{YSA} can be reduced to –3 599. Then,

$$|M_{YSA}/M_{YST4}| = |- 3\,599/1\,800| = 1{,}999 < 2{,}00$$

For the 8-inch top discharge nozzle,

$$|F_{XDA}/F_{XDT}| = |+ 1\,600/850| = 1{,}88 < 2{,}00$$

$$|F_{YDA}/F_{YDT}| = |- 100/700| = 0{,}14 < 2{,}00$$

$$|F_{ZDA}/F_{ZDT4}| = |+ 1\,950/1\,100| = 1{,}77 < 2{,}00$$

$$|M_{XDA}/M_{XDT4}| = |+ 500/2\,600| = 0{,}19 < 2{,}00$$

$$|M_{YDA}/M_{YDT4}| = |- 2\,500/1\,300| = 1{,}93 < 2{,}00$$

$$|M_{ZDA}/M_{ZDT4}| = |- 3\,600/1\,900| = 1{,}89 < 2{,}00$$

Copyright American Petroleum Institute
Reproduced by IHS under license with API
Document provided by IHS Licensee=TECNA/5935100001, 11/02/2004 06:04:35 MST
Questions or comments about this message: please call the Document Policy Group

Provided that M_{YSA} can be reduced to – 3 599, the applied piping loads acting on each nozzle satisfy the condition specified in F.1.2 a).

F.4.3.2.2 A check of condition F.1.2 b) is as follows:

For the suction nozzle, F_{RSA} and M_{RSA} are determined using the square root of the sum of the squares method:

$$F_{RSA} = [(F_{XSA})^2 + (F_{YSA})^2 + (F_{ZSA})^2]^{0,5} = [(+\ 2\ 900)^2 + (0)^2 + (-\ 1\ 990)^2]^{0,5} = 3\ 517$$

$$M_{RSA} = [(M_{XSA})^2 + (M_{YSA})^2 + (M_{ZSA})^2]^{0,5} = [(-\ 1\ 000)^2 + (-3\ 599)^2 + (-5\ 500)^2]^{0,5} = 6\ 649$$

Referring to Equation (F.1),

$$F_{RSA}/(1{,}5 \times F_{RST4}) + M_{RSA}/(1{,}5 \times M_{RST4}) \leqslant 2$$

$$3\ 517/(1{,}5 \times 2\ 200) + 6\ 649/(1{,}5 \times 5\ 000) \leqslant 2$$

$$1{,}95 < 2$$

For the discharge nozzle, F_{RDA} and M_{RDA} are determined by the same method used to find F_{RSA} and M_{RSA}:

$$F_{RDA} = [(F_{XDA})^2 + (F_{YDA})^2 + (F_{ZDA})^2]^{0,5} = [(+\ 1\ 600)^2 + (-\ 100)^2 + (+\ 1\ 950)^2]^{0,5} = 2\ 524$$

$$M_{RDA} = [M_{XDA})^2 + (M_{YDA})^2 + (M_{ZDA})^2]^{0,5} = [(+\ 500)^2 + (-\ 2\ 500)^2 + (-\ 3\ 600)^2]^{0,5} = 4\ 411$$

Referring to Equation (F.2),

$$F_{RDA}/(1{,}5 \times F_{RDT4}) + M_{RDA}/\ (1{,}5 \times M_{RDT4}) \leqslant 2$$

$$2\ 524/(1{,}5 \times 1\ 560) + 4\ 411\ /\ (1{,}5 \times 3\ 500) \leqslant 2$$

$$1{,}92 < 2$$

The loads acting on each nozzle satisfy the appropriate interaction equation, so the condition specified in F.1.2 b) is satisfied.

F.4.3.2.3 A check of condition F.1.2 c) is as follows:

To check this condition, the applied component forces and moments are translated and resolved to the centre of the pump. F_{RCA} is determined as follows [see F.1.2 c)]:

$$FX_{CA} = F_{XSA} + F_{XDA}$$

$$F_{YCA} = F_{YSA} + F_{YDA}$$

$$F_{ZCA} = F_{ZSA} + F_{ZDA}$$

$$F_{RCA} = [(F_{XCA})^2 + (F_{YCA})^2 + (F_{ZCA})^2]^{0,5}$$

$$F_{XCA} = (+\ 2\ 900) + (+\ 1\ 600) = +\ 4\ 500$$

$$F_{YCA} = (0) + (-\ 100) = -\ 100$$

$$F_{ZCA} = (-\ 1\ 990) + (+\ 1\ 950) = -\ 40$$

Copyright American Petroleum Institute
Reproduced by IHS under license with API
Document provided by IHS Licensee=TECNA/5935100001, 11/02/2004 06:04:35 MST
Questions or comments about this message: please call the Document Policy Group

$F_{RCA} = [(+\ 4\ 500)^2 + (-\ 100)^2 + (-\ 40)^2]^{0,5} = 4\ 501$

Referring to Equation (F.3),

$F_{RCA} < 1,5 \times (F_{RST4} + F_{RDT4})$

$4\ 501 < 1,5 \times (2\ 200 + 1\ 560)$

$4\ 501 < 5\ 640$

M_{YCA} is determined as follows [see F.1.2 c)]:

$M_{YCA} = M_{YSA} + M_{YDA} + [(F_{XSA})\ (zS) + (F_{XDA})(zD) - (F_{ZSA})(xS) - (F_{ZDA})\ (xD)]/12$

$= (-\ 3\ 599) + (-\ 2\ 500) + [(+\ 2\ 900)\ (0,00) + (+\ 1\ 600)\ (+\ 15) - (-\ 1\ 990)(+\ 10,5) - (+\ 1\ 950)(0,00)]/12$

$= -\ 2\ 358$

Referring to Equation (F.4),

$|M_{YCA}| < 2,0 \times (M_{YST4} + M_{YDT4})$

$|-\ 2\ 358| < 2,0 \times (1\ 800 + 1\ 300)$

$2\ 358 < 6\ 200$

M_{RCA} is determined as follows [see F.1.2 c)]:

$M_{XCA} = M_{XSA} + M_{XDA} - [(F_{YSA})(zS) + (F_{YDA})(zD) - (F_{ZSA})(yS) - (F_{ZDA})\ (yD)]/12$

$M_{YCA} = M_{YSA} + M_{YDA} + [(F_{XSA})(zS) + (F_{XDA})(zD) - (F_{ZSA})(xS) - (F_{ZDA})\ (xD)]/12$

$M_{ZCA} = M_{ZSA} + M_{ZDA} - [(F_{XSA})(yS) + (F_{XDA})(yD) - (F_{YSA})(xS) - (F_{YDA})\ (xD)]/12$

$M_{RCA} = [(M_{XCA})^2 + (M_{YCA})^2 + (M_{ZCA})^2]^{0,5}$

$M_{XCA} = (-\ 1\ 000) + (+\ 500) - [(0)\ (0,00) + (-\ 100)\ (+\ 15,00) - (-\ 1\ 990)\ (0,00) - (+\ 1\ 950)\ (-\ 12,25)]/12$

$= -\ 2\ 366$

$M_{YCA} = -\ 2\ 358$ (see previous calculation)

$M_{ZCA} = (-\ 5\ 500) + (-\ 3\ 600) - [(+\ 2\ 900)(0,00) + (+\ 1\ 600)\ (-\ 12,25) - (0)(+\ 10,50) - (-\ 100)(0,00)]/12 =$

$= -\ 7\ 467$

$M_{RCA} = [(-\ 2\ 366)^2 + (-\ 2\ 358)^2 + (-\ 7\ 467)^2]^{0,5} = 8\ 180$

Referring to Equation (F.5),

$M_{RCA} < 1,5 \times (M_{RST4} + M_{RDT4})$

$8\ 180 < 1,5 \times (5\ 000 + 3\ 500)$

$8\ 180 < 12\ 750$

Thus, all the requirements of F.1.2 c) have been satisfied.

Copyright American Petroleum Institute
Reproduced by IHS under license with API
Document provided by IHS Licensee=TECNA/5935100001, 11/02/2004 06:04:35 MST
Questions or comments about this message: please call the Document Policy Group

F.4.4 Example 2B (US Customary units)

F.4.4.1 Problem

For a NPS 3 × NPS 4 × 7 in vertical in-line pump (OH3 through OH6), the proposed applied nozzle loadings are as given in Table F.6. By inspection, F_{ZSA}, M_{ZSA}, and M_{XDA} are greater than two times the values shown in Table 4 (US Customary units). As stated in F.2, these component loads are acceptable provided that the calculated principal stress is less than 5 950 psi. The problem is to determine the principal stress for the suction nozzle and the discharge nozzle.

Table F.6 — Proposed applied nozzle loadings for Example 2B

Force	Value lbf	Moment	Value ft·lbf
		NPS 4 suction	
F_{XSA}	– 500	M_{XSA}	+ 100
F_{YSA}	– 1 200	M_{YSA}	– 1 500
F_{ZSA}	+ 300	M_{ZSA}	+ 1 000
		NPS 3 discharge	
F_{XDA}	+ 300	M_{XDA}	+ 2 000
F_{YDA}	– 500	M_{YDA}	+ 200
F_{ZDA}	+100	M_{ZDA}	+ 100

F.4.4.2 Solution

F.4.4.2.1 Suction nozzle calculations are as follows:

For Schedule 40 pipe with a nominal size of 4 in, D_o = 4,500 in and D_i = 4,026 in. Therefore,

$$D_o^2 - D_i^2 = (4{,}500)^2 - (4{,}026)^2 = 4{,}04$$

$$D_o^4 - D_i^4 = (4{,}500)^4 - (4{,}026)^4 = 147{,}34$$

$$[(F_{XSA})^2 + (F_{ZSA})^2]^{0,5} = [(-500)^2 + (+300)^2]^{0,5} = 583$$

$$[(M_{XSA})^2 + (M_{ZSA})^2]^{0,5} = [(+100)^2 + (+1\,000)^2]^{0,5} = 1\,005$$

Equation (F.10) is used to determine the longitudinal stress for the suction nozzle, $\sigma_{l,s}$.

The applied F_{YSA} load acting on the suction nozzle is in the negative Y direction and produces a compressive stress; therefore, the negative sign on F_{YSA} is used.

$$\sigma_{l,s} = [1{,}27 \times F_{YSA}/(D_o^2 - D_i^2)] + [122 \times D_o\,(M_{XSA}^2 + M_{ZSA}^2)^{0,5}]/(D_o^4 - D_i^4)$$

$$= [1{,}27 \times (-1\,200)/4{,}04] + [122 \times 4{,}500 \times 1\,005)]/147{,}34$$

$$= 3\,367$$

Copyright American Petroleum Institute
Reproduced by IHS under license with API
Document provided by IHS Licensee=TECNA/5935100001, 11/02/2004 06:04:35 MST
Questions or comments about this message: please call the Document Policy Group

Equation (F.11) is used to determine the shear stress for the suction nozzle, τ_s.

$$\tau_s = [1{,}27 \times (F_{XSA}^2 + F_{ZSA}^2)^{0,5}]/(D_o^2 - D_i^2)] + [61 \times D_o\,(|M_{YSA}|)]/(D_o^4 - D_i^4)$$

$$= (1{,}27 \times 583/4{,}04) + [61 \times 4{,}500 \times (\,|-1\,500|\,)/147{,}34]$$

$$= 2\,978$$

The principal stress for the suction nozzle, $\sigma_{p,s}$ is calculated using Equation (F.9):

$$\sigma_{p,s} = (\sigma_s/2) + (\sigma_s^2/4 + \tau_s^2)^{0,5} < 5\,950$$

$$= (+3\,367/2) + [(+\,3\,367)^2/4 + (+\,2\,978)^2]^{0,5}$$

$$= +\,5\,105 < 5\,950$$

Thus, the suction nozzle loads are satisfactory.

F.4.4.2.2 Discharge nozzle calculations are as follows:

For Schedule-40 pipe with a nominal size of 3 in, D_o = 3,500, and D_i = 3,068. Therefore,

$$D_o^2 - D_i^2 = (3{,}500)^2 - (3{,}068)^2 = 2{,}84$$

$$D_o^4 - D_i^4 = (3{,}500)^4 - (3{,}068)^4 = 61{,}47$$

$$[(F_{XDA})^2 + (F_{ZDA})^2]^{0,5} = [(+\,300)^2 + (+\,100)^2]^{0,5} = 316$$

$$[(M_{XDA})^2 + (M_{ZDA})^2]^{0,5} = [(+\,2\,000)^2 + (+\,100)^2]^{0,5} = 2\,002$$

Equation (F.10) is used to determine the longitudinal stress for the discharge nozzle, $\sigma_{l,D}$

The applied F_{YDA} load acting on the discharge nozzle is in the negative Y direction and produces a tensile stress; therefore, a positive sign on F_{YDA} is used.

$$\sigma_{l,D} = [1{,}27\,F_{YDA}/(D_o^2 - D_i^2)] + [122\,D_o\,(M_{XDA}^2 + M_{ZDA}^2)^{0,5}]/(D_o^4 - D_i^4)$$

$$= [1{,}27(+\,500)/2{,}84] + [122(3{,}5)\,(2\,002)]/61{,}47$$

$$= 14\,131$$

Equation (F.11) is used to determine the shear stress for the discharge nozzle, τ_D.

$$\tau_D = [1{,}27(F_{XDA}^2 + F_{ZDA}^2)^{0,5}]/(D_o^2 - D_i^2)] + [61\,D_o\,(\,|M_{YDA}|\,)/(D_o^4 - D_i^4)]$$

$$= (1{,}27 \times 316/2{,}84) + [61 \times 3{,}500 \times (\,|+200|\,)/61{,}47] = 836$$

The principal stress for the discharge nozzle, $\sigma_{p,D}$, is calculated using Equation (F.9):

$$\sigma_{p,D} = (\sigma_D/2) + (\sigma_D^2/4 + \tau_D^2)^{0,5} < 5\,950$$

$$= (+\,14\,131/2) + [(+\,14\,131)^2/4 + (+\,836)^2]^{0,5} = +\,14\,181 > 5\,950$$

Thus, the discharge nozzle loads are too large. By inspection, if M_{XDA} is reduced by 50 % to 1 000 ft·lbf. the resulting principal stress will still exceed 5 950 psi. Therefore, the maximum value for M_{XDA} is twice M_{XDT4}, or 1 400 ft·lbf.

Copyright American Petroleum Institute
Reproduced by IHS under license with API
Document provided by IHS Licensee=TECNA/5935100001, 11/02/2004 06:04:35 MST
Questions or comments about this message: please call the Document Policy Group

Annex G
(informative)

Materials class selection guidance

Table G.1 is intended to provide general guidance for on-plot process plants and off-plot transfer and loading services. It should not be used without a knowledgeable review of the specific services involved.

Table G.1 — Materials class selection guidance

Service	Temperature range		Pressure range	Materials class	Ref. note
	°C	(°F)			
Fresh water, condensate, cooling tower water	< 100	< 212	All	I-1 or I-2	
Boiling water and process water	< 120	< 250	All	I-1 or I-2	a
	120 to 175	250 to 350	All	S-5	a
	> 175	> 350	All	S-6, C-6	a
Boiler feed water					
Axially split	> 95	> 200	All	C-6	
Double-casing (barrel)	> 95	> 200	All	S-6	
Boiler circulator	> 95	> 200	All	C-6	
Foul water, reflux drum water, water draw, and hydrocarbons containing these waters, including reflux streams	< 175	< 350	All	S-3 or S-6	b
	> 175	> 350	All	C-6	
Propane, butane, liquefied petroleum gas, ammonia, ethylene, low temperature services (minimum metal temperature)	230	< 450	All	S-1	
	> – 46	> – 50	All	S-1(LCB)	h
	> – 73	> – 100	All	S-1(LC2)	h
	> – 100	> – 150	All	S-1(LC3)	h, i
	> – 196	> – 320	All	A-7 or A-8	h, i
Diesel oil; gasoline; naphtha; kerosene; gas oils; light, medium and heavy lubricating oils; fuel oil; residuum; crude oil; asphalt; synthetic crude bottoms	< 230	< 450	All	S-1	
	230 to 370	450 to 700	All	S-6	b, c
	> 370	> 700	All	C-6	b
Non-corrosive hydrocarbons, e.g. catalytic reformate, isomaxate, desulfurized oils	230 to 370	450 to 700	All	S-4	c
Xylene, toluene, acetone, benzene, furfural, MEK, cumene	< 230	< 450	All	S-1	
Sodium carbonate	< 175	< 350	All	I-1	
Caustic (sodium hydroxide), concentration <20 %	< 100	< 212	All	S-1	d
	> 100	> 200	All	—	e
Seawater	< 95	< 200	All	—	f
Sour water	< 260	< 470	All	D-1	
Produced water, formation water and brine	All	All	All	D-1 or D-2	f
Sulfur (liquid state)	All	All	All	S-1	
FCC slurry	< 370	< 700	All	C-6	
Potassium carbonate	< 175	< 350	All	C-6	
	< 370	< 700	All	A-8	

Copyright American Petroleum Institute
Reproduced by IHS under license with API
Document provided by IHS Licensee=TECNA/5935100001, 11/02/2004 06:04:35 MST
Questions or comments about this message: please call the Document Policy Group

Table G.1 (*continued*)

Service	Temperature range °C	Temperature range (°F)	Pressure range	Materials class	Ref. note
MEA, DEA, TEA stock solutions	< 120	< 250	All	S-1	
DEA, TEA-lean solutions	< 120	< 250	All	S-1 or S-8	d, g
MEA-lean solution (CO_2 only)	80 to 150	175 to 300	All	S-9	d
MEA-lean solution (CO_2 and H_2S)	80 to 150	175 to 300	All	S-8	d, g
MEA-, DEA-, TEA-, rich solutions	< 80	175	All	S-1 or S-8	d
Sulfuric acid concentration > 85 %	< 38	< 100	All	S-1	b
85 % to < 1 %	< 230	< 450	All	A-8	b
Hydrofluoric acid concentration > 96 %	< 38	< 100	All	S-9	b

The materials for pump parts for each material class are given in Annex H.

Specific materials recommendations should be obtained for services not clearly identified by the service descriptions listed in this table.

Cast iron casings, where recommended for chemical services, are for non-hazardous locations only. Steel casings (5.12.1.6) should be used for pumps in services located near process plants or in any location where released vapour from a failure could create a hazardous situation or where pumps could be subjected to hydraulic shock, for example, in loading services.

[a] Oxygen content and buffering of water should be considered in material selection.

[b] The corrosiveness of foul waters, hydrocarbons over 230 °C (450 °F), acids, and acid sludges may vary widely. Material recommendations should be obtained for each service. The material class indicated above is satisfactory for many of these services, but shall be verified. S-8 materials may also be considered for operating temperatures below 95 °C (200 °F).

[c] If product corrosivity is low, Class S-4 materials may be used for services at 231 °C to 370 °C (451 °F to 700 °F). Specific material recommendations should be obtained in each instance.

[d] All welds shall be stress-relieved.

[e] UNS N08007 or Ni-Cu alloy pump material should be used.

[f] For seawater, produced water, formation water and brine services, the purchaser and the vendor should agree on the construction materials that best suit the intended use.

[g] The vendor shall consider the effects of differential material expansion between casing and rotor and confirm suitability if operating temperatures are to exceed 95 °C (200 °F).

[h] Materials selected for low temperature services shall meet the requirements of 5.12.4 and 5.12.1.6. Casting alloy ASTM A 352, Grades LCB, LC2 & LC3 is shown only for reference. Use equivalent materials for wrought alloys.

[i] Material alloys based on aluminium, bronze, aluminium bronze and nickel, may also be considered for temperatures as low as – 196 °C (– 320 °F).

Copyright American Petroleum Institute
Reproduced by IHS under license with API
Document provided by IHS Licensee=TECNA/5935100001, 11/02/2004 06:04:35 MST
Questions or comments about this message: please call the Document Policy Group

Annex H
(normative)

Materials and material specifications for pump parts

Table H.1 lists material classes for the purchaser to select (see 5.12.1.1).

Tables H.2, H.3, H.4 and H.5 may be used for guidance regarding materials specifications. If these tables are used, it should not be assumed that the material specifications are acceptable without taking full account of the service in which they will be applied. Table H.2 lists corresponding international materials which may be acceptable. These materials represent family/type and grade only. The final required condition or hardness level (where appropriate) is not specified. These materials might not be interchangeable for all applications.

Copyright American Petroleum Institute
Reproduced by IHS under license with API
Document provided by IHS Licensee=TECNA/5935100001, 11/02/2004 06:04:35 MST
Questions or comments about this message: please call the Document Policy Group

Table H.1 — Material classes for pump parts

PART	Full compli-ance materials[b]	Material classes and abbreviations													
		I-1	I-2	S-1	S-3	S-4	S-5	S-6	S-8[l]	S-9[l]	C-6	A-7	A-8	D-1[j]	D-2[j]
		CI[a]	CI	STL	STL	STL	STL	STL	STL	STL	12 % CHR	AUS	316 AUS	Duplex	Super Duplex
		CI	BRZ	CI	NI-RESIST	STL	STL 12 % CHR	12 % CHR	316 AUS	Ni-Cu Alloy	12 % CHR	AUS[c, d]	316 AUS[d]	Duplex	Super Duplex
Pressure casing	Yes	Cast iron	Cast iron	Carbon steel	Carbon steel	Carbon steel	Carbon Steel	Carbon Steel	Carbon Steel	Carbon Steel	12 % CHR	AUS	316 AUS	Duplex	Super Duplex
Inner case parts: (bowls, diffusers, diaphragms)	No	Cast iron	Bronze	Cast iron	Ni-Resist	Cast iron	Carbon Steel	12 % CHR	316 AUS	Ni-Cu Alloy	12 % CHR	AUS	316 AUS	Duplex	Super Duplex
Impeller	Yes	Cast iron	Bronze	Cast Iron	Ni-Resist	Carbon steel	Carbon Steel	12 % CHR	316 AUS	Ni-Cu Alloy	12 % CHR	AUS	316 AUS	Duplex	Super Duplex
Case wear rings[k]	No	Cast iron	Bronze	Cast Iron	Ni-Resist	Cast iron	12 % CHR Hardened	12 % CHR Hardened	Hard-faced 316AUS[e]	Ni-Cu Alloy	12 % CHR Hardened	Hard-faced AUS[e]	Hard-faced 316 AUS[e]	Hard-faced Duplex[e]	Hard-faced Super Duplex[e]
Impeller wear rings[k]	No	Cast iron	Bronze	Cast Iron	Ni-Resist	Cast iron	12 % CHR Hardened	12 % CHR Hardened	Hard-faced 316AUS[e]	Ni-Cu Alloy	12 % CHR Hardened	Hard-faced AUS[e]	Hard-faced 316 AUS[e]	Hard-faced Duplex[e]	Hard-faced Super Duplex[e]
Shaft[d]	Yes	Carbon steel	Carbon steel	Carbon steel	Carbon steel	Carbon steel	AISI 4140	AISI 4140[f]	316 AUS	Ni-Cu Alloy	12 % CHR	AUS	316 AUS	Duplex	Super Duplex
Throat bushings[k]	No	Cast iron	Bronze	Cast iron	Ni-Resist	Cast iron	12 % CHR Hardened	12 % CHR Hardened	316 AUS	Ni-Cu Alloy	12 % CHR Hardened	AUS	316 AUS	Duplex	Super Duplex
Interstage sleeves[k]	No	Cast iron	Bronze	Cast iron	Ni-Resist	Cast iron	12 % CHR Hardened	12 % CHR Hardened	Hard-faced 316AUS[e]	Ni-Cu Alloy	12 % CHR Hardened	Hard-faced AUS[e]	Hard-faced 316 AUS[e]	Hard-faced Duplex[e]	Hard-faced Super Duplex[e]
Interstage bushings[k]	No	Cast iron	Bronze	Cast iron	Ni-Resist	Cast iron	12 % CHR Hardened	12 % CHR Hardened	Hard-faced 316AUS[e]	Ni-Cu Alloy	12 % CHR Hardened	Hard-faced AUS[e]	Hard-faced 316 AUS[e]	Hard-faced Duplex[e]	Hard-faced Super Duplex[e]
Case and gland studs	Yes	Carbon steel	Carbon steel	AISI 4140 steel	AISI 4140 Steel	AISI 4140 Steel	AISI 4140 Steel	AISI 4140 Steel	AISI 4140 Steel	Ni-Cu Alloy Hardened[i]	AISI 4140 Steel	AISI 4140 Steel	AISI 4140 Steel	Duplex[i]	Super Duplex[i]
Case gasket	No	AUS, Spiral wound[g]	AUS, Spiral wound[g]	AUS, Spiral wound[g]	AUS, Spiral wound[g]	AUS, Spiral wound[g]	AUS, Spiral wound[g]	AUS, Spiral wound[g]	316 AUS Spiral wound[g]	Ni-Cu Alloy, Spiral wound, PTFE filled[g]	AUS, Spiral wound[g]	AUS, Spiral wound[g]	316 AUS Spiral wound[g]	Duplex SS Spiral wound[g]	Duplex SS Spiral Wound[g]

Copyright American Petroleum Institute
Reproduced by IHS under license with API
Document provided by IHS Licensee=TECNA/5935100001, 11/02/2004 06:04:35 MST
Questions or comments about this message: please call the Document Policy Group

Table H.1 (*continued*)

PART	Full compli-ance materials[b]	Material classes and abbreviations													
		I-1	I-2	S-1	S-3	S-4	S-5	S-6	S-8[l]	S-9[l]	C-6	A-7	A-8	D-1[j]	D-2[j]
		CI[a]	CI	STL	STL	STL	STL	STL	STL	STL	12 % CHR	AUS	316 AUS	Duplex	Super Duplex
		CI	BRZ	CI	NI-RESIST	STL	STL 12 % CHR	12 % CHR	316 AUS	Ni-Cu Alloy	12 % CHR	AUS[c, d]	316 AUS[d]	Duplex	Super Duplex
Discharge head/ suction can	Yes	Carbon steel	Carbon steel	Carbon steel	Carbon steel	Carbon steel	Carbon steel	Carbon steel	Carbon steel	Carbon steel	AUS	AUS	316 AUS	Duplex	Super Duplex
Column / bowl shaft bushings	No	Nitrile butadiene[h]	Bronze	Filled carbon	Nitrile butadiene[h]	Filled carbon	Filled carbon	Filled carbon	Filled carbon	Filled carbon	Filled carbon	Filled carbon	Filled carbon	Filled carbon	Filled carbon
Wetted fasteners (bolts)	Yes	Carbon steel	Carbon steel	Carbon steel	Carbon steel	Carbon steel	316 AUS	316 AUS	316 AUS	Ni-Cu Alloy	316 AUS	316 AUS	316 AUS	Duplex	Super Duplex

[a] The abbreviations in the upper part of the second row indicate the case material; the abbreviations in the lower part of the second row indicate trim material. Abbreviations are as follows: BRZ = bronze, STL = steel, 12 %, CHR = 12 % chromium, AUS = austenitic stainless steel, CI = cast iron, 316 AUS = Type 316 austenitic stainless steel

[b] See 5.12.1.4

[c] Austenitic stainless steels include ISO Types 683-13-10/19 (AISI Standard Types 302, 303, 304, 316, 321, and 347).

[d] For vertically suspended pumps with shafts exposed to liquid and running in bushings, the standard shaft material is 12 % chrome, except for Classes S-9, A7, A-8, and D-1. The standard shaft material for cantilever pumps (Type VS5) is AISI 4140 where the service liquid allows (see Annex G, Table G.1).

[e] Unless otherwise specified, the need for hard-facing and the specific hard-facing material for each application is determined by the vendor and described in the proposal. Alternatives to hard-facing may include opening running clearances (5.7.4) or the use of non-galling materials or non-metallic materials, depending on the corrosiveness of the pumped liquid.

[f] For Class S-6, the standard shaft material for boiler feed service and for liquid temperatures above 175 °C (350 °F) is 12 % chrome (see Annex G, Table G.1).

[g] If pumps with axially split casings are furnished, a sheet gasket suitable for the service is acceptable. Spiral-wound gaskets should contain a filler material suitable for the service. Gaskets other than spiral wound, may be proposed and furnished if proven suitable for service and specifically approved by the purchaser.

[h] Alternative materials may be substituted for liquid temperatures greater than 45 °C (110 °F) or for other special services.

[i] Unless otherwise specified, AISI 4140 steel may be used for non-wetted case and gland studs.

[j] Some applications may require alloy grades higher than the Duplex materials given in Table H.2.

"Super Duplex " material grades with pitting resistance equivalency (PRE) values greater than 40 may be necessary.

PRE $\geqslant$ 40, where PRE is based on actual chemical analysis.

PRE $= \%Cr_{free} + (3{,}3 \times \%\ \text{molybdenum}) + (2 \times \%\ \text{copper}) + (2 \times \%\ \text{tungsten}) + (16 \times \%\ \text{nitrogen})$

$= [(\%\ \text{chromium} - (14{,}5 \times \%\ \text{carbon})] + (3{,}3 \times \%\ \text{molybdenum}) + (2 \times \%\ \text{copper}) + (2 \times \%\ \text{tungsten}) + (16 \times \%\ \text{nitrogen})$

Note that alternative materials such as "super austenitic" may also be considered.

[k] Non-metallic wear part materials, proven to be compatible with the specified process fluid, may be proposed within the applicable limits shown in Table H.4. Also see 5.7.4 c).

[l] The vendor shall consider the effects of differential material expansion between casing and rotor and confirm suitability if operating temperatures are to exceed 95 °C (200 °F).

Copyright American Petroleum Institute
Reproduced by IHS under license with API
Document provided by IHS Licensee=TECNA/5935100001, 11/02/2004 06:04:35 MST
Questions or comments about this message: please call the Document Policy Group

Table H.2 — Material specifications for pump parts

Material class	Applic-ations	Inter-national	USA		Europe			Japan
		ISO	ASTM	UNS [a]	EN [b]	Grade	Material No.	JIS
Cast iron	Pressure castings	185/ Gr. 250	A 278 Class 30	F12401	EN 1561	EN-GJL-250	JL 1040	G 5501, FC 300
	General castings	185/ Gr. 300	A 48 Class 25/30/40	F11701/ F12101	EN 1561	EN-GJL-250 EN-GJL-300	JL 1040 JL 1050	G 5501, FC 250/300
Carbon steel	Pressure castings	4991 C23-45 AH	A 216 Gr WCB	J03002	EN 10213-2	GP 240 GH	1.0619	G 5151, Cl SCPH 2
	Wrought / forgings	683-18-C25	A 266 Class 2	K03506	EN 10222-2	P 280 GH	1.0426	G 3202, Cl SFVC 2A
	Bar stock: pressure	683-18-C25	A 696 Gr B40	G10200	EN 10273	P 295 GH	1.0481	G 4051, Cl S25C
	Bar stock: general	683-18-C45e	A 576 Gr 1045	G10450	EN 10083-2	C 45	1.0503	G 4051, Cl S45C
	Bolts and studs (general)	2604-2-F31	A 193 Gr B7	G41400	EN 10269	42 Cr Mo 4	1.7225	G 4107, Class 2, SNB7
	Nuts (general)	683-1-C35e	A 194 Gr 2H	K04002	EN 10269	C 35 E	1.1181	G 4051, Cl S45C
	Plate	9328-4 P 355 TN/PL 355 TN	A 516 Gr 65/70	K02403/ K02700	EN 10028-3	P 355 N P 355 NL1	1.0562 1.0566	G 3106, Gr SM400B
	Pipe	9329-2 PH26	A 106 GrB	K03006	EN 10208-1	L 245 GA	1.0459	G 3456, Gr. STPT 370/410
	Fittings		A 105	K03504				G 4051, Cl S25C G 3202, Cl SFVC 2A, SFVC2B
AISI 4140 steel	Bar stock		A 434 Class BB A 434 Class BC	G41400 [c]	EN 10083-1	42 Cr Mo 4	1.7225	G 4105, Cl SCM 440
	Bolts and studs		A 193 Gr B7	G41400	EN 10269	42 Cr Mo 4	1.7225	G 4107, Class 2, SNB7
	Nuts	2604-2-F31	A 194 Gr 2H	K04002	EN 10269	C 45 E	1.1191	G 4051, Cl S45C

Copyright American Petroleum Institute
Reproduced by IHS under license with API
Document provided by IHS Licensee=TECNA/5935100001, 11/02/2004 06:04:35 MST
Questions or comments about this message: please call the Document Policy Group

Table H.2 (*continued*)

Material class	Applic-ations	Inter-national	USA		Europe			Japan
		ISO	ASTM	UNS [a]	EN [b]	Grade	Material No.	JIS
12 % Chrome steel	Pressure castings		A 217 Gr CA 15	J91150	EN 10213-2	GX 8 Cr Ni 12	1.4107	G 5121, C1 SCS 1
			A 487 Gr CA6NM	J91540	EN 10213-2	GX 4 Cr Ni 13-4	1.4317	G 5121, C1 SCS 6
	General castings		A 743 Gr CA 15	J91150	EN 10283	GX 12 Cr 12	1.4011	
			A 743 Gr CA6NM	J91540	EN 10283	GX 4 Cr Ni 13-4	1.4317	
	Wrought / forgings: pressure	683-13-3	A 182 Gr F6a Cl 1 A 182 Gr F 6 NM	S41000 S41500	EN 10250-4 EN 10222-5	X12 Cr13 X 3 Cr NiMo 13-4-1	1.4006 1.4313	G 3214, Gr. SUS 410-A G 3214, Cl SUS F6 NM
	Wrought / forgings: general	683-13-2	A 473 Type 410	S41000	EN 10088-3	X 12 Cr 13	1.4006	G 3214, Gr. SUS 410-A
	Bar stock: pressure	683-13-3	A 479 Type 410	S41000	EN 10272	X12 Cr 13	1.4006	G 4303, Gr. SUS 410 or 403
	Bar stock: general	683-13-3	A 276 Type 410	S41400	EN 10088-3	X 12 Cr 13	1.4006	G 4303, Gr. SUS 403 or 410
	Bar stock: forgings [c]	683-13-4	A 276 Type 420 A 473 Type 416 A 582 Type 416	S42000 S41600 S41600	EN 10088-3	X 20 Cr 13 X 20 Cr S 13 X 20 Cr S 13	1.4021 1.4005 1.4005	G 4303, Gr. SUS 420J1 or 420J2
	Bolts and studs [d]	3506-1, C4-70	A 193 Gr B6	S41000	EN 10269	X22CrMoV 12-1	1.4923	G 4303, Gr. SUS 403 or 410
	Nuts [d]	3506-2, C4-70	A 194 Gr 6	S41000	EN 10269	X22CrMoV 12-1	1.4923	G 4303, Gr. SUS 403 or 410
	Plate	683-13-3	A 240 Type 410	S41000	EN 10088-2	X 12 Cr 13	1.4006	G 4304/4305, Gr. SUS 403 or 410

Copyright American Petroleum Institute
Reproduced by IHS under license with API
Document provided by IHS Licensee=TECNA/5935100001, 11/02/2004 06:04:35 MST
Questions or comments about this message: please call the Document Policy Group

Table H.2 (*continued*)

Material class	Applic-ations	Inter-national	USA		Europe			Japan
		ISO	ASTM	UNS [a]	EN [b]	Grade	Material No.	JIS
Austenitic stainless steel	Pressure castings	683-13-10	A 351 Gr CF3	J92500	EN 10213-4	GX2 Cr Ni 19-11	1.4309	G 5121, Cl SCS 13A
		683-13-19	A 351 Gr CF3M	J92800	EN 10213-4	GX2 Cr Ni Mo 19-11-2	1.4409	G 5121, Cl SCS 14A
	General castings		A 743 Gr CF3	J92500	EN 10283	GX2 Cr Ni 19-11	1.4309	G 5121, Cl SCS 13A
			A 743 Gr CF3M	J92800	EN 10283	GX2 Cr Ni Mo 19-11-2	1.4409	G 5121, Cl SCS 14A
	Wrought / forgings	9327-5 XCrNi18-10	A 182 Gr F 304L	S30403	EN 10222-5	X2 Cr Ni 19-11	1.4306	G 3214, Gr. SUS F 304 L
		9327-5 XCrNi Mo17-12	A 182 Gr F 316L	S31603	EN 10222-5 EN 10250-4	X2 Cr Ni Mo 17-12-2	1.4404	G 3214, C1 SUS F 316 L
	Bar stock [e]	9327-5 X2CrNi18-10 9327-5 X2CrNi-Mo17-12	A 479 Type 304L A 479 Type 316L	S30403 S31603	EN 10088-3 EN 10088-3	X2 Cr Ni 19-11 X2 Cr Ni Mo 17-12-2	1.4306 1.4404	G 4303, Gr. SUS 304 L G 4303, Gr. SUS 316 L
			A 479 Type XM19	S20910				
	Plate	9328-5 X2CrNi-Mo17-12-2	A 240 Gr 304L / 316L	S30403 S31603	EN 10028-7 EN 10028-7	X2 Cr Ni 19-11 X2 Cr Ni Mo 17-12-2	1.4306 1.4404	G 4304/4305, Gr. SUS 304 L/ 316 L
	Pipe	683-13-10 683-13-19	A 312 Type 304L 316L	S30403 S31603				G 3459, Gr. SUS 304 LTP/316 LTP
	Fittings	9327-5 X2CrNi18-10 9327-5 X2CrNi-Mo17-12	A 182 Gr F304L Gr 316L	S30403 S31603	EN 10222-5	X2 Cr Ni 19-11 X2 Cr Ni Mo 17-12-2	1.4306 1.4404	G 3214, Gr. SUS F 304 L/F 316 L
	Bolts and studs	3506-1, A4-70	A 193 Gr B 8 M	S31600	EN 10250-4	X6 Cr Ni Mo Ti 17-12-2	1.4571	G 4303, Gr. SUS 316
	Nuts	3506-2, A4-70	A 194 Gr B 8 M	S31600	EN 10250-4	X6 Cr Ni Mo Ti 17-12-2	1.4571	G 4303, Gr. SUS 316

Copyright American Petroleum Institute
Reproduced by IHS under license with API
Document provided by IHS Licensee=TECNA/5935100001, 11/02/2004 06:04:35 MST
Questions or comments about this message: please call the Document Policy Group

Table H.2 (*continued*)

Material class	Applic-ations	Inter-national	USA		Europe			Japan
		ISO	ASTM	UNS [a]	EN [b]	Grade	Material No.	JIS
Duplex stainless steel	Pressure castings		A 351 Gr CD4 MCu A 890 Gr 1 B	J93370 J93372	EN 10213-4	GX2 CrNiMoCuN-25-6-3-3	1.4517	
			A 890 Gr 3 [c]	J93371				G 5121, Gr. SCS 11
			A 890 Gr 4 [c]	J92205	EN 10213-4	GX2 CrNiMoCuN-25-6-3-3	1.4517	G 5121, Gr. SCS 10
	Wrought / forgings	9327-5 X2CrNi-MoN22-5-3	A 182 Gr F 51	S31803	EN 10250-4 EN 10222-5	X2CrNiMoN-22-5-3	1.4462	
			A 479	S32550	EN 10088-3	X2CrNiMoCuN-25-6-3	1.4507	
	Bar stock	9327-5 X2CrNi-MoN22-5-3	A 276-S31803	S31803	EN 10088-3	X2CrNiMoN-22-5-3	1.4462	G 4303, Gr. SUS 329 J3L
	Plate		A 240-S31803	S31803	EN 10028-7	X2CrNiMoN-22-5-3	1.4462	G 4304/G 4305, Gr. SUS 329 J3L
	Pipe		A 790-S31803	S31803				G 3459, Gr. SUS 329 J3LTP
	Fittings	9327-5 X2CrNi-MoN22-5-3	A 182 Gr F 51	S31803	EN 10250-4 EN 10222-5	X2CrNiMoN-22-5-3	1.4462	B 2312/B 2316, Gr. SUS 329 J3L
	Bolts and studs		A 276-S31803	S31803	EN 10088-3	X2CrNiMoN-22-5-3	1.4462	G 4303, Gr. SUS 329 J3L
	Nuts		A 276-S31803	S31803	EN 10088-3	X2CrNiMoN-22-5-3	1.4462	G 4303, Gr. SUS 329 J3L

Copyright American Petroleum Institute
Reproduced by IHS under license with API
Document provided by IHS Licensee=TECNA/5935100001, 11/02/2004 06:04:35 MST
Questions or comments about this message: please call the Document Policy Group

Table H.2 (*continued*)

Material class	Applic-ations	Inter-national	USA		Europe			Japan
		ISO	ASTM	UNS [a]	EN [b]	Grade	Material No.	JIS
Super duplex stainless steel [f]	Pressure castings		A 351 Gr CD3MWCuN	J93380				
			A 890 Gr 5A	J93404	EN 10213-4	GX2CrNiMoN-26-7-4	1.4469	
			A 890 Gr 6A	J93380				
	Wrought / forgings		A 182 Gr 55	S32760	EN 10250-4 EN 10088-3	X2CrNiMoCu-WN 25-7-4	1.4501	G 4303, Gr. SUS 329 J4L
	Bar stock		A 276-S32760 A 479-S32760	S32760	EN 10088-3	X2CrNiMoCu-WN 25-7-4	1.4501	G 4304/G 4305, Gr. SUS 329 J4L
	Plate		A 240-S32760	S32760	EN 10028-7	X2CrNiMoCu-WN 25-7-4	1.4501	
	Pipe		A 790-S32760	S32760				G 3459, Gr. SUS 329 J4LTP
	Fittings		A 182 Gr F55	S32760	EN 10250-4 EN 10088-3	X2CrNiMoCu-WN 25-7-4	1.4501	B 2312/B 2316, Gr. SUS 329 J4L
	Bolts and studs		A 276-S32760	S32760	EN 10088-3	X2CrNiMoCu-WN 25-7-4	1.4501	G 4303, Gr. SUS 329 J4L
	Nuts		A 276-S32760	S32760	EN 10088-3	X2CrNiMoCu-WN 25-7-4	1.4501	G 4303, Gr. SUS 329 J4L

a UNS (unified numbering system) designation for chemistry only.

b Where EN standards do not yet exist, European national standards are available, e.g. AFNOR, BS, DIN, etc.

c Do not use for shafts in the hardened condition (over 302 HB).

d Special, normally use AISI 4140.

e For shafts, standard grades of 304 and 316 may be substituted in place of low carbon (L) grades.

f Super Duplex stainless steel classified with Pitting Resistance Equivalent (PRE) number greater than or equal to 40

$$PRE = \%\ Cr_{free} + (3{,}3 \times \%\ \text{molybdenum}) + (2 \times \%\ \text{copper}) + (2 \times \%\ \text{tungsten}) + (16 \times \%\ \text{nitrogen})$$

$$= [(\%\ \text{chromium} - (14{,}5 \times \%\ \text{carbon})] + (3{,}3 \times \%\ \text{molybdenum}) + (2 \times \%\ \text{copper}) + (2 \times \%\ \text{tungsten}) + (16 \times \%\ \text{nitrogen}).$$

Copyright American Petroleum Institute
Reproduced by IHS under license with API
Document provided by IHS Licensee=TECNA/5935100001, 11/02/2004 06:04:35 MST
Questions or comments about this message: please call the Document Policy Group

Table H.3 — Miscellaneous material specifications

Babbit	ASTM B 23, Grades 1-9, as required by vendor for service conditions
Bronze	UNS C87200 (silicon bronze), C90700 or C92200 (tin bronze), C95200 (aluminium bronze) or C95800 (nickel aluminium bronze)
Hard-facing	Type 3 tungsten carbide, etc.; overlay-weld deposit of 0,8 mm (0,030 in) minimum finished thickness or, if available, a solid cast part of equal material may be substituted.
	Type 1 tungsten carbide as required for service conditions, with cobalt binder (solid part, not overlay), Type 2 tungsten carbide as required for service conditions, with nickel binder (solid part, not overlay); Type 3 tungsten carbide-sprayed overlay as required for service conditions.
Low-carbon nickel-molybdenum-chromium alloy	ASTM B564, UNS N10276 (forgings) ASTM B574, UNS N10276 (bar and rod) ASTM B575, UNS N10276 (plate, sheet and strip) ASTM A494, Grade CW-2M (weldable cast)
Nickel copper alloy	ASTM B564, UNS N04400 (forgings) ASTM B164, Class A, UNS N04400 (bar and rod) ASTM B127, UNS N04400 (plate, sheet and strip) ASTM A494, Grade M30C (weldable cast)
Ni resist	ASTM A436, Type 1, 2 or 3, UNS F41000, F41002 and F41004 respectively (austenitic cast iron)-, ASTM A439, Type D2, UNS F43000 (austenitic ductile iron)
Precipitation-hardening nickel alloy	ASTM B637, UNS N07718 (forgings and bars) ASTM B670, UNS N07718 (plate, sheet, and strip)
Precipitation-hardening stainless steel	ASTM A564, Grade 630, UNS S 17400 or Grade 631, UNS 17700 (wrought) ASTM A747, Grade CB7Cu-1, UNS J92180 (cast)
Sheet gasket	Long-fibre material with synthetic rubber binder suitable for service conditions, or spiral-wound stainless steel and equal gasket material

Table H.4 — Non-metallic wear part materials

Material	Temperature limits		Limiting pressure differential	Application
	min.	max.		
Polyether ether ketone (PEEK) Chopped carbon fibre filled	– 30 ºC (– 20 ºF)	135 ºC (275 ºF)	2 000 kPa (20 bar) (300 psi)	Stationary parts
Polyether ether ketone (PEEK) Continuous carbon fibre wound	– 30 ºC (– 20 ºF)	230 ºC (450 ºF)	3 500 kPa (35 bar) (500 psi), or 14 000 kPa (140 bar) (2 000 psi) if suitably supported	Stationary or rotating
Polyamide	Need information relative to experience.			
Carbon graphite				Stationary parts
Resin impregnated	– 50 ºC (– 55 ºF)	285 ºC (550 ºF)	2 000 kPa (20 bar) (300 psi)	
Babbit impregnated	– 100 ºC (– 150 ºF)	150 ºC (300 ºF)	2 750 kPa (27,5 bar) (400 psi)	
Nickel impregnated	– 195 ºC (– 320 ºF)	400 ºC (750 ºF)	3 500 kPa (35 bar) (500 psi)	
Copper impregnated	– 100 ºC (– 450 ºF)			
Non-metallic wear part materials, which are proven to be compatible with the specified process fluid, may be proposed within the above limits. See 5.7.4.c. Such materials may be selected as wear components to be mated against a suitably selected metallic component such as hardened 12 % Cr steel or hard-faced austenitic stainless steel. Materials may be used beyond these limits if proven application experience can be provided, and if approved by the purchaser.				

Copyright American Petroleum Institute
Reproduced by IHS under license with API
Document provided by IHS Licensee=TECNA/5935100001, 11/02/2004 06:04:35 MST
Questions or comments about this message: please call the Document Policy Group

Table H.5 — Piping materials

Component	Fluid					
	Auxiliary process fluid		Steam		Cooling water	
	Category		Gauge pressure		Nominal size	
	Non-flammable/ Non-hazardous	Flammable/ Hazardous	⩽ 500 kPa (5 bar) (75 psi)	> 500 kPa (5 bar) (75 psi)	Standard ⩽ DN 25 (1 NPS)	Optional ⩾ DN 40 (1 1/2 NPS)
Pipe	Seamless [a]	Seamless [a]	Seamless [a]	Seamless [a]	–	Carbon steel, (ASTM A120 Schedule 40 galvanized to ASTM A 153)
Tubing [b]	Stainless steel (ASTM A269 Seamless type 316)	Stainless steel (ASTM A269 Seamless type 316)	Stainless steel (ASTM A269 Seamless type 316)	Stainless steel (ASTM A269 Seamless type 316)	Stainless steel (ASTM A269 Seamless type 316)	–
All valves	Class 800	Class 800	Class 800	Class 800	Class 200 Bronze	Class 200 Bronze
Gate and globe valve	Bolted bonnet and gland	Bolted bonnet and gland	Bolted bonnet and gland	Bolted bonnet and gland	–	–
Pipe fittings and unions	Forged class 3 000	Forged class 3 000	Forged class 3 000	Forged class 3 000	Malleable iron (ASTM A338 and A197 Class 150) galvanized to ASTM A153	Malleable iron (ASTM A338 and A197 Class 150) galvanized to ASTM A153
Tube fittings	Manufacturer's standard	Manufacturer's standard	Manufacturer's standard	Manufacturer's standard	Manufacturer's standard	–
Fabricated joints ⩽ DN 25 (1 NPS)	Threaded	Socket-welded	Threaded	Socket-welded	Threaded	–
Fabricated joints ⩾ DN 40 (1-1/2 NPS)	–	–	–	–	–	Purchaser to specify
Gaskets	–	Type 304 or 316 stainless steel spiral-wound	–	Type 304 or 316 stainless steel spiral-wound	–	–
Flange bolting	–	Low alloy steel (ASTM A193 Grade B7 ASTM A194 Grade 2H)	–	Low alloy steel (ASTM A193 Grade B7 ASTM A194 Grade 2H)	–	–

The ASTM standards listed are examples of acceptable materials for each type. Alternative materials may be used if agreed by the purchaser (Table H.2 may be used for guidance).

Examples of acceptable materials are:

Carbon steel pipe: ASTM A53, Grade B; ASTM A106, Grade B; ASTM A524; or API Spec 5L, Grade A or B.

Carbon steel fittings, valves, and flanged components: ASTM A105 and ASTM A181.

Stainless steel piping: ASTM A312, Type 316L.

Stainless steel fittings, valves and flanged components: ASTM A182, Type 316L.

[a] Schedule 80 shall be used for pipe sizes from DN 15 to DN 40 (NPS 1/2 to NPS 1 1/2); schedule 40 shall be used for sizes DN 50 (2 NPS) and larger.

[b] Acceptable tubing sizes are (ISO 4200): 12,7 mm dia × 1,66 mm wall (1/2 in dia × 0,065 in wall), 19 mm dia × 2,6 mm wall (3/4 in dia × 0,095 in wall), 25 mm dia × 2,9 mm wall (1 in dia × 0,109 in wall)

Copyright American Petroleum Institute
Reproduced by IHS under license with API
Document provided by IHS Licensee=TECNA/5935100001, 11/02/2004 06:04:35 MST
Questions or comments about this message: please call the Document Policy Group

Annex I
(normative)

Lateral analysis

I.1 Lateral analysis

I.1.1 General

If a lateral analysis is required (see 8.2.4.1), the method and assessment of results shall be as specified in I.1.2 through I.1.5. Table I.1 illustrates the analysis process. The method and assessment specified are peculiar to liquid-handling turbomachines.

Table I.1 — Rotor lateral analysis logic diagram

Step	If…	Then…
1	the pump is identical or similar to an existing pump…	analysis is not needed.
2	the rotor is classically stiff…	analysis is not needed.
3	neither 1 nor 2 is true…	analysis is required.

I.1.2 Natural frequencies

The report shall state the following:

a) the rotor's first, second and third “dry” critical speeds (see 5.6.15);

NOTE These serve as useful reference points for subsequent analysis of the damped natural frequencies.

b) all the rotor's damped natural frequencies within the frequency range zero to 2,2 times maximum continuous speed, all the rotor’s natural frequencies shall be calculated for the speed range 25 % to 125 % of rated, taking account of the following:

   1) stiffness and damping at the following internal running clearances at the expected temperature:

      — as-new clearances, with water;

      — as-new clearances, with the pumped liquid;

      — twice (2×) the as-new clearances, with the pumped liquid.

   2) stiffness and damping at the shaft seals (if labyrinth type);

   3) stiffness and damping within the bearings for the average clearance and oil temperature. The effect of bearing stiffness and damping in pumps is generally minor in comparison to that of the internal running clearances; therefore, it is sufficient to analyse the bearings at their average clearance and oil temperature;

   4) mass and stiffness of the bearing support structure;

   5) inertia of the pump half-coupling hub and half the coupling spacer;

c) values or the basis of the stiffness and damping coefficients used in the calculation.

Copyright American Petroleum Institute
Reproduced by IHS under license with API
Document provided by IHS Licensee=TECNA/5935100001, 11/02/2004 06:04:35 MST
Questions or comments about this message: please call the Document Policy Group

I.1.3 Separation margins and damping

For both as-new and 2× as-new clearances, the damping factor versus separation margin between any bending natural frequency and the synchronous run line shall be within the "acceptable" region shown on Figure I.1. If this condition cannot be satisfied, the damped response to unbalance shall be determined (see I.1.4).

NOTE In liquid-handling turbomachines, the first assessment of a rotor's dynamic characteristics is based on damping versus separation margin, rather than amplification factor versus separation margin. Two factors account for this basis. First, the rotor's natural frequencies increase with rotative speed, a consequence of the differential pressure across internal clearances also increasing with rotative speed. On a Campbell diagram, Figure I.2, this means the closer separations are between the running speed and natural frequencies rather than between the running speed and the critical speeds. Because the amplification factor at the closer separations is not related to synchronous (unbalance) excitation of the rotor, it can only be developed by an approximate calculation based on the damping. Second, employing damping allows a minimum value to be specified for natural frequency to running speed ratios from 0,8 to 0,4, thereby assuring the rotor of freedom from significant subsynchronous vibration.

Damping factor is related to logarithmic decrement by the equation:

$$\sigma = (2\,\pi\,\xi)/(1 - \xi^2)^{0,5120} \tag{I.1}$$

where

σ is the logarithmic decrement;

ξ is the damping factor.

For ξ up to 0,4, the following approximate relationships between ξ, δ and amplification factor, F_a, are sufficiently accurate for practical purposes:

$$\xi = \delta/2\pi = 1/2 \times F_a \tag{I.2}$$

Critically damped conditions correspond to the following:

$\xi \geqslant 0,2$,

$\delta \geqslant 1,2$,

$F_a \leqslant 2,5$

I.1.4 Damped unbalance response analysis

If the damping factor versus separation margin for a mode or modes is not acceptable by the criteria in Figure I.1, the rotor's damped response to unbalance shall be determined for the mode(s) in question on the following basis:

a) the pumped liquid;

b) clearance condition(s), as-new or 2× as-new, causing inadequate separation margin versus damping;

c) total unbalance of four times (4×) the allowable value (see 8.2.4.2.1) lumped at one or more points to excite the mode(s) being investigated.

Only one mode shall be investigated in each computer run.

Copyright American Petroleum Institute
Reproduced by IHS under license with API
Document provided by IHS Licensee=TECNA/5935100001, 11/02/2004 06:04:35 MST
Questions or comments about this message: please call the Document Policy Group

I.1.5 Allowable displacement

The peak-to-peak displacement of the unbalanced rotor at the point(s) of maximum displacement shall not exceed 35 % of the diametral running clearance at that point.

NOTE In centrifugal pumps, the typical damped response to unbalance does not show a peak in displacement at resonance large enough to assess the amplification factor. With this limitation, assessment of the damped response to unbalance is restricted to comparing rotor displacement to the available clearance.

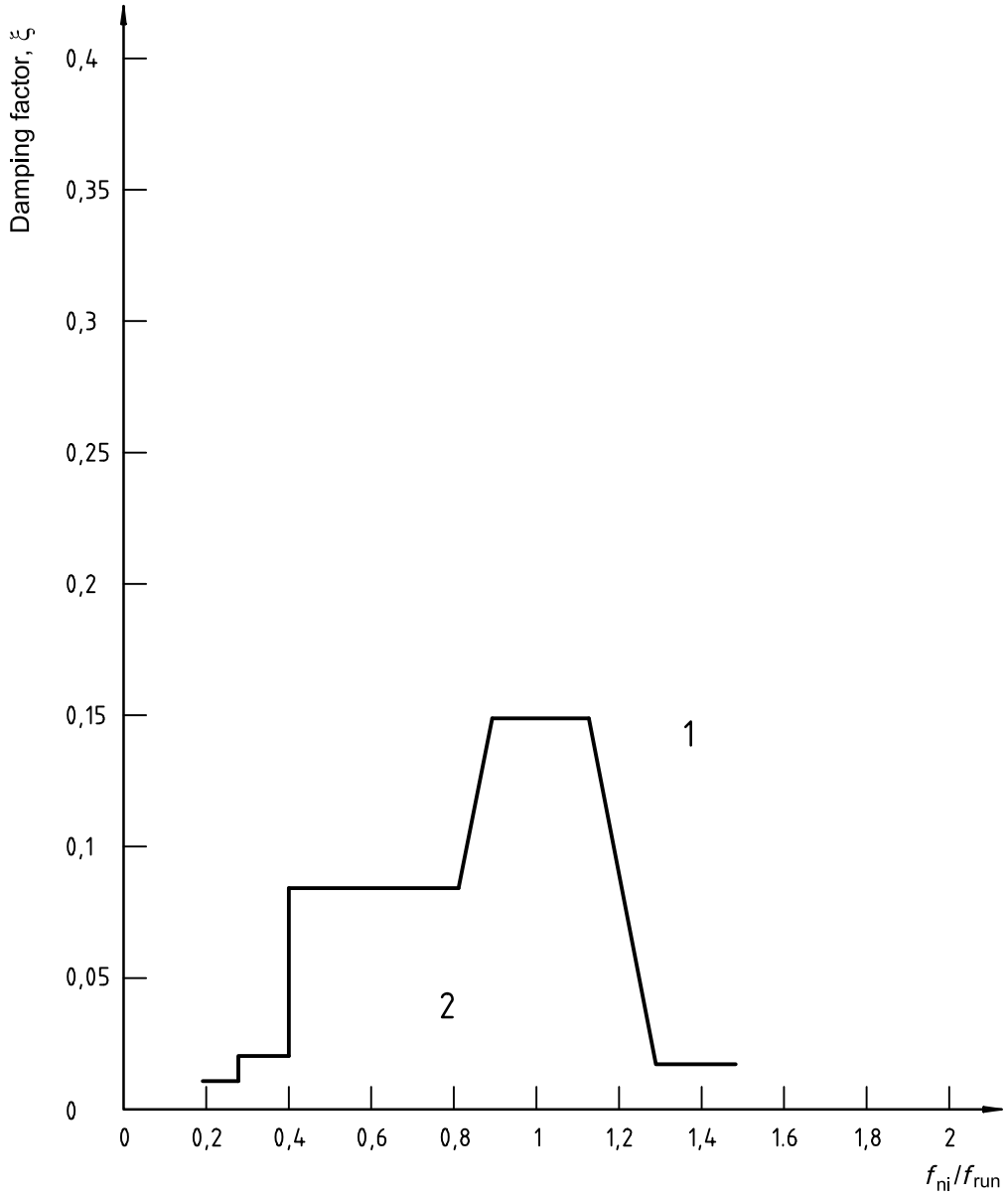

Key

1 acceptable region

2 unacceptable region

Figure I.1 — Damping factor versus frequency ratio

Copyright American Petroleum Institute
Reproduced by IHS under license with API
Document provided by IHS Licensee=TECNA/5935100001, 11/02/2004 06:04:35 MST
Questions or comments about this message: please call the Document Policy Group

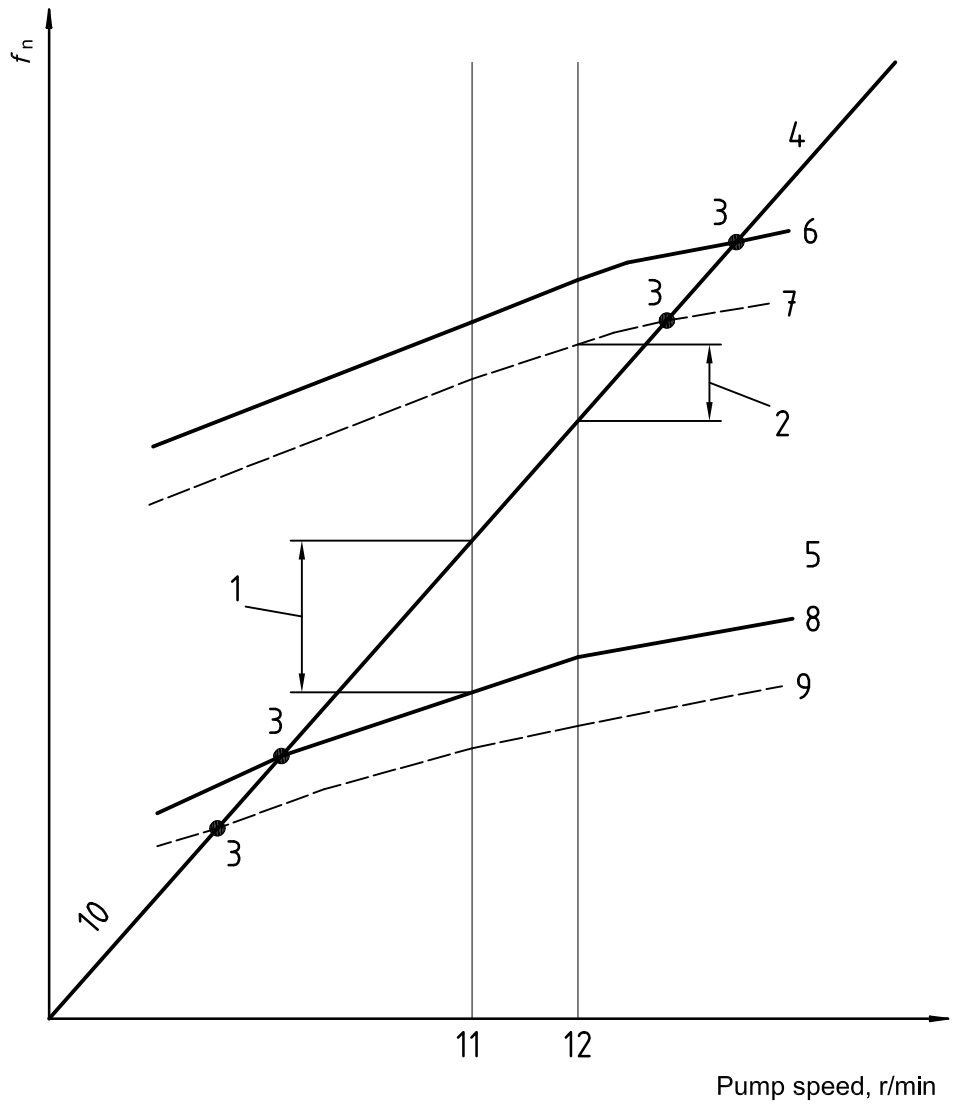

Key

1 minimum separation margin, 1st f_n

2 minimum separation margin, 2nd f_n

3 critical speeds

4 second bending

5 first bending

6 as-new clearance

7 2× clearance

8 as-new clearance

9 2× clearance

10 run line

11 min.

12 max.

Figure I.2 — Typical Campbell diagram

Copyright American Petroleum Institute
Reproduced by IHS under license with API
Document provided by IHS Licensee=TECNA/5935100001, 11/02/2004 06:04:35 MST
Questions or comments about this message: please call the Document Policy Group

I.2 Shop verification of rotor dynamic characteristics

I.2.1 If specified, the dynamic characteristics of the rotor shall be verified during the shop test. The rotor's actual response to unbalance shall be the basis for confirming the validity of the damped lateral analysis. This response is measured during either variable-speed operation from rated speed down to 75 % of the first critical speed or during coast-down. If the damped response to unbalance was not determined in the original rotor analysis (see I.1.4), this response shall be determined for a pump with new clearances handling water before proceeding with shop verification. The test unbalances shall be vectorially added in phase with the residual unbalance, at locations determined by the manufacturer (usually at the coupling and/or thrust collar).

NOTE The principal objective of shop verification by response to unbalance is to verify the existence of a critical speed (vibration peak) within the tolerance of the calculated value, or, if the analysis predicted a highly damped critical speed, the absence of a vibration peak within tolerance of the calculated value. Shop verification by this method is feasible only for pumps that have sleeve bearings and are furnished with proximity probe pairs at each journal bearing.

I.2.2 The magnitude and location of the test unbalance(s) shall be determined from a calibration of the rotor's sensitivity to unbalance. The calibration shall be performed by obtaining the vibration orbits at each bearing, filtered to rotor speed (1×), during two trial runs as follows:

a) with the rotor as-built;

b) with trial unbalance weights added 90° from the maximum displacement in run a).

The magnitude of the test unbalances should be such that the calculated maximum shaft displacement caused by the resultant total unbalance (residual plus test) is 150 % to 200 % of the allowable displacement from Table 7 or Table 8 at the bearing probes, but shall not exceed eight times the maximum allowable rotor unbalance.

I.2.3 During the test, the rotor's speed, vibration displacement and corresponding phase angle, filtered to rotor speed (1×), shall be measured and recorded.

I.2.4 The rotor's characteristics shall be considered verified if the following requirements are met:

a) observed critical speed(s) (distinct vibration peak and appropriate phase shift) within ± 10 % of the calculated value(s);

b) measured vibration amplitudes within 135 % of the calculated values.

Highly damped critical speeds may not be observable, therefore the absence of rotor response in the region of a calculated highly damped critical speed is verification of the analysis.

I.2.5 If the acceptance criteria given in I.2.4 are not met, the stiffness or damping coefficients, or both, used in the natural frequency calculation shall be adjusted to produce agreement between the calculated and measured results. The coefficients of one type of element, annular clearances with L/D < 0,15, annular clearances L/D > 0,15, impeller interaction, and bearings shall be adjusted with the same correction factor. Once agreement is reached, the same correction factors shall be applied to the calculation of the rotor's natural frequencies and damping for the pumped liquid, and the rotor's separation margins versus damping factors rechecked for acceptability.

Of the coefficients used in rotor lateral analysis, those for damping in annular clearances have the highest uncertainty and are therefore usually the first to be adjusted. The stiffness coefficients of annular clearances typically have low uncertainty and, therefore, should be adjusted only on the basis of supporting data. Adjustments of bearing coefficients require specific justification because the typical values are based on reliable empirical data.

I.2.6 Alternative methods of verifying the rotor's dynamic characteristics, for example, variable frequency excitation with the pump at running speed to determine the rotor's natural frequencies, are available. The use of alternative methods and the interpretation of the results shall be agreed between the purchaser and manufacturer.

Copyright American Petroleum Institute
Reproduced by IHS under license with API
Document provided by IHS Licensee=TECNA/5935100001, 11/02/2004 06:04:35 MST
Questions or comments about this message: please call the Document Policy Group

I.3 Documentation

The report on a lateral analysis shall include the following:

a) results of initial assessment (see 8.2.4.1.1);

b) fundamental rotor data used for the analysis;

c) Campbell diagram (see Figure I.2);

d) plot of damping ratio versus separation margin;

e) mode shape at the critical speed(s) for which the damped response to unbalance was determined (see I.1.4);

f) Bode plot(s) from shop verification by unbalance (see I.2.3);

g) summary of analysis corrections to reach agreement with shop verification (see I.2.5).

Items e) through g) shall be furnished only if the activity documented was required by the analysis or specified by the purchaser.

--`,`,`,`,```,,,`,,,`,,,,,`,,-`-`,,`,,`,`,,`---

Copyright American Petroleum Institute
Reproduced by IHS under license with API
Document provided by IHS Licensee=TECNA/5935100001, 11/02/2004 06:04:35 MST
Questions or comments about this message: please call the Document Policy Group

Annex J
(normative)

Determination of residual unbalance

J.1 General

This annex describes the procedure to be used to determine residual unbalance in machine rotors. Although some balancing machines may be set up to read out the exact amount of unbalance, the calibration can be in error. The only sure method of determining residual unbalance is to test the rotor with a known amount of unbalance.

J.2 Term and definition

J.2.1
residual unbalance
amount of unbalance remaining in a rotor after balancing

NOTE Unless otherwise specified, residual unbalance is expressed in gram millimetres (g·mm) or ounce inches (oz-in).

J.3 Maximum allowable residual unbalance

J.3.1 The maximum allowable residual unbalance per plane shall be determined from Table 17.

J.3.2 If the actual static load on each journal is not known, assume that the total rotor mass is equally supported by the bearings. For example, a two-bearing rotor with a mass of 2 700 kg (6 000 lb) would be assumed to impose a mass of 1 350 kg (3 000 lb) on each journal.

J.4 Residual unbalance check

J.4.1 General

J.4.1.1 When the balancing machine readings indicate that the rotor has been balanced to within the specified tolerance, a residual unbalance check shall be performed before the rotor is removed from the balancing machine.

● **J.4.1.2** To check the residual unbalance, a known trial mass is attached to the rotor sequentially in 6 (or 12, if specified by the purchaser) equally spaced radial positions, each at the same radial distance. The check is run in each correction plane, and the readings in each plane are plotted on a graph using the procedure specified in J.4.2.

J.4.2 Procedure

J.4.2.1 Select a trial mass and radius that provides between one and two times the maximum allowable residual unbalance [that is, if U_{max} is 1 440 g·mm (2 oz-in), the trial mass should cause 1 440 g·mm to 2 880 g·mm (2 oz-in to 4 oz-in) of unbalance].

--`,`,`,`,```,,,`,,,`,,,,,`,,,-`-`,,`,,`,`,,`---
Copyright American Petroleum Institute
Reproduced by IHS under license with API
Document provided by IHS Licensee=TECNA/5935100001, 11/02/2004 06:04:35 MST
Questions or comments about this message: please call the Document Policy Group

J.4.2.2 Starting at the last known heavy spot in each correction plane, mark off the specified number of radial positions (6 or 12) in equal (60° or 30°) increments around the rotor. Add the trial mass to the last known heavy spot in one plane. If the rotor has been balanced very precisely and the final heavy spot cannot be determined, add the trial mass to any one of the marked radial positions.

J.4.2.3 To verify that an appropriate trial mass has been selected, operate the balancing machine and note the reading on the meter. If the reading is at the upper limit of the meter range, a smaller trial mass shall be used. If there is little or no meter reading, a larger trial mass shall be used. Little or no meter reading generally indicates that the rotor was either not balanced correctly, or the balancing machine is not sensitive enough, or the balancing machine is faulty (e.g. a faulty transducer). Whatever the error, it shall be corrected before proceeding with the residual check.

J.4.2.4 Locate the mass at each of the equally spaced positions in turn, and record the amount of unbalance indicated on the meter for each position. Repeat the initial position as a check. All verification shall be performed using only one sensitivity range on the balance machine.

J.4.2.5 Plot the readings on the residual unbalance work sheet and calculate the amount of residual unbalance (see Figures J.1 and J.2). The maximum meter reading occurs when the trial mass is added at the rotor's heavy spot; the minimum reading occurs when the trial mass is located opposite the heavy spot. Thus, the plotted readings should form an approximate circle (see Figures J.3 and J.4). An average of the maximum and minimum meter readings represents the effect of the trial mass. The distance of the circle's centre from the origin of the polar plot represents the residual unbalance in that plane.

J.4.2.6 Repeat the steps described in J.4.2.1 through J.4.2.5 for each balance plane. If the specified maximum allowable residual unbalance has been exceeded in any balance plane, the rotor shall be balanced more precisely and checked again. If a correction is made to any balance plane, the residual unbalance check shall be repeated in all planes.

J.4.2.7 For progressively-balanced rotors, a residual unbalance check shall be performed after the addition and balancing of the first rotor component, and at the completion of balancing of the entire rotor, as a minimum.

NOTE This ensures that time is not wasted and rotor components are not subjected to unnecessary material removal in attempting to balance a multiple-component rotor with a faulty balancing machine.

Copyright American Petroleum Institute
Reproduced by IHS under license with API
Document provided by IHS Licensee=TECNA/5935100001, 11/02/2004 06:04:35 MST
Questions or comments about this message: please call the Document Policy Group

Equipment (rotor) No.:

Purchase order No.: _____

Correction plane (inlet, drive end, etc. — use sketch): _____

Balancing speed: _____r/min

n = maximum allowable rotor speed: _____r/min

m (or W) = mass of journal (closest to this correction plane): _____kg (lb)

U_{max}= maximum allowable residual unbalance = 6 350 m/n (4 W/n)

6 350 × _____ kg/_____ r/min; (4 × _____lb /_____r/min) _____g·mm (oz-in)

Trial unbalance (2 × U_{max}) _____g·mm (oz-in)

R = radius of mass placement: _____mm (in)

Trial unbalance mass = Trial unbalance/R

_____ g·mm /_____ mm (_____ oz-in/_____in) _____g (oz)

Conversion information: 1 ounce = 28,350 g

Test data

Position	Trial mass angular location	Balancing machine amplitude readout
1		
2		
3		
4		
5		
6		
7		

Rotor sketch

Test data — Graphic analysis

Step 1: Plot data on the polar chart (Figure J.2). Scale the chart so the largest and smallest amplitudes will fit conveniently.

Step 2: With a compass, draw the best-fit circle through the six points and mark the centre of this circle.

Step 3: Measure the diameter of the circle in units of scale chosen in Step 1 and record. _____ units

Step 4: Record the trial unbalance from above. _____ g·mm (oz-in)

Step 5: Double the trial unbalance in Step 4 (may use twice the actual residual unbalance). _____ g·mm (oz-in)

Step 6: Divide the answer in Step 5 by the answer in Step 3. _____ scale factor

You now have a correlation between the units on the polar chart and the actual balance.

Copyright American Petroleum Institute
Reproduced by IHS under license with API
Document provided by IHS Licensee=TECNA/5935100001, 11/02/2004 06:04:35 MST
Questions or comments about this message: please call the Document Policy Group

The circle you have drawn shall contain the origin of the polar chart. If it doesn't, the residual unbalance of the rotor exceeds the applied test unbalance.

NOTE Several possibilities for the drawn circle not including the origin of the polar chart are: operator error during balancing, a faulty balancing machine transducer or cable, or a balancing machine not sensitive enough.

If the circle does contain the origin of the polar chart, the distance between origin of the chart and the centre of your circle is the actual residual unbalance present on the rotor correction plane. Measure the distance in units of scale you chose in Step 1 and multiply this number by the scale factor determined in Step 6. Distance in units of scale between origin and centre of the circle times scale factor equals actual residual unbalance.

Record actual residual unbalance _____ g·mm (oz-in)

Record allowable residual unbalance_____g·mm (oz-in)

Correction plane _____ for rotor No. _____ (has/has not) passed.

By _____ Date _____

Figure J.1 — Residual unbalance work sheet (*continued*)

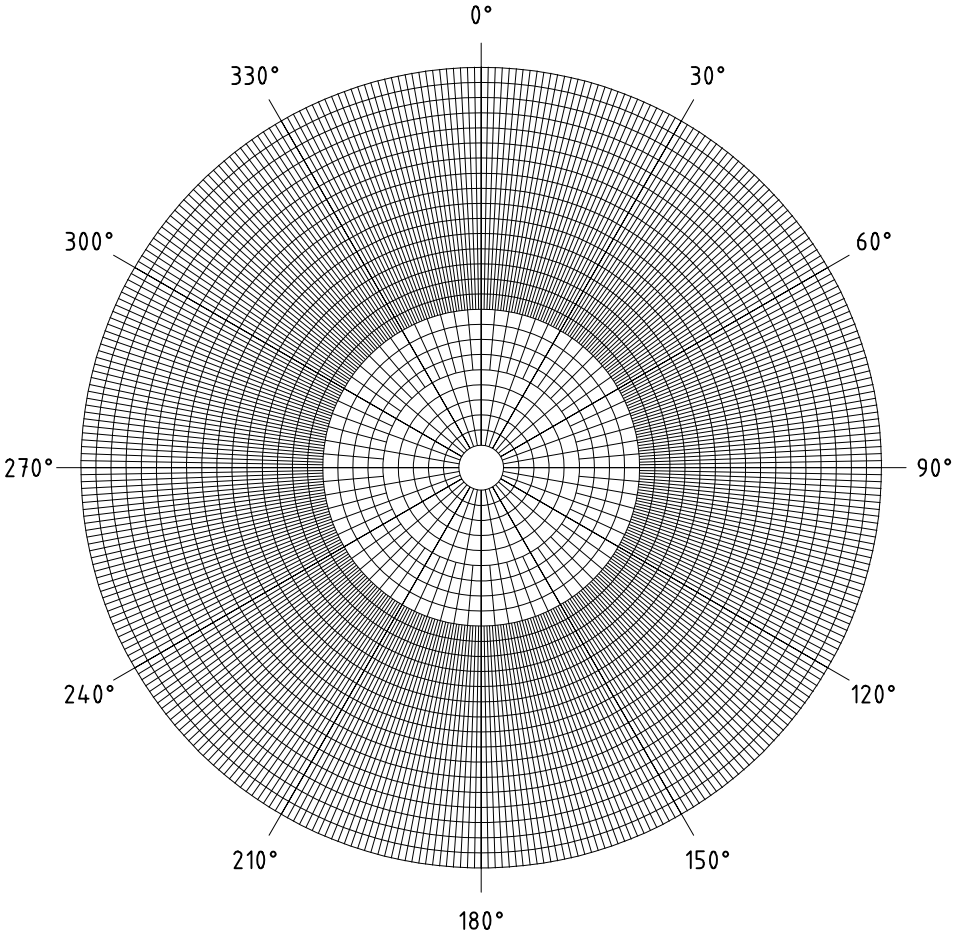

Figure J.2 — Residual unbalance work sheet — Polar chart

Copyright American Petroleum Institute
Reproduced by IHS under license with API
Document provided by IHS Licensee=TECNA/5935100001, 11/02/2004 06:04:35 MST
Questions or comments about this message: please call the Document Policy Group

Equipment (rotor) No.: C–101

Purchase order No.: _____

Correction plane (inlet, drive end, etc. — use sketch): A

Balancing speed: 800 r/min

n = maximum allowable rotor speed: 10 000 r/min

m (or W) = mass of journal (closest to this correction plane): 908 ~~kg~~ (lb)

U_{max} = maximum allowable residual unbalance = 6 350 m/n (4 W/n)

~~6350 × _____ kg/_____ r/min~~; 4 × 908 lb/ 10 000 r/min 0,36 ~~g·mm~~ (oz-in)

Trial unbalance (2 × U_{max}) 0,72 ~~g·mm~~ (oz-in)

R = radius of mass placement: 6,875 mm (in)

Trial unbalance mass = Trial unbalance/R

~~_____g·mm/_____mm~~ 0,72 oz-in/ 6,875 in 0,10 ~~g~~ (oz)

Conversion information: 1 oz = 28,350 g

Test data

Position	Trial mass angular location	Balancing machine amplitude readout
1	0°	14,0
2	60°	12,0
3	120°	14,0
4	180°	23,5
5	240°	23,0
6	300°	15,5
7	0°	13,5

Rotor sketch

Test data — Graphic analysis

Step 1: Plot data on the polar chart (Figure J.4). Scale the chart so the largest and smallest amplitudes will fit conveniently.

Step 2: With a compass, draw the best-fit circle through the six points and mark the centre of this circle.

Step 3: Measure the diameter of the circle in units of scale chosen in Step 1 and record. 35 units

Step 4: Record the trial unbalance from above. 0,72 ~~g·mm~~ (oz-in)

Step 5: Double the trial unbalance in Step 4 (may use twice the actual residual unbalance). 1,44 ~~g·mm~~ (oz-in)

Step 6: Divide the answer in Step 5 by the answer in Step 3. 0,041 scale factor

You now have a correlation between the units on the polar chart and the actual balance.

Copyright American Petroleum Institute
Reproduced by IHS under license with API
Document provided by IHS Licensee=TECNA/5935100001, 11/02/2004 06:04:35 MST
Questions or comments about this message: please call the Document Policy Group

The circle you have drawn shall contain the origin of the polar chart. If it doesn't, the residual unbalance of the rotor exceeds the applied test unbalance.

NOTE Several possibilities for the drawn circle not including the origin of the polar chart are: operator error during balancing, a faulty balancing machine transducer or cable, or the balancing machine is not sensitive enough.

If the circle does contain the origin of the polar chart, the distance between origin of the chart and the centre of your circle is the actual residual unbalance present on the rotor correction plane. Measure the distance in units of scale you chose in Step 1 and multiply this number by the scale factor determined in Step 6. Distance in units of scale between origin and centre of the circle times scale factor equals actual residual unbalance.

Record actual residual unbalance 6,5 (0,041) = 0,27 ~~g·mm~~ (oz-in)

Record allowable residual unbalance 0,36 ~~g·mm~~ (oz-in)

Correction plane A for rotor No. C-101 (has/~~has not~~) passed.

By *John Inspector* Date 2002-04-30

Figure J.3 — Example of completed residual unbalance worksheet (*continued*)

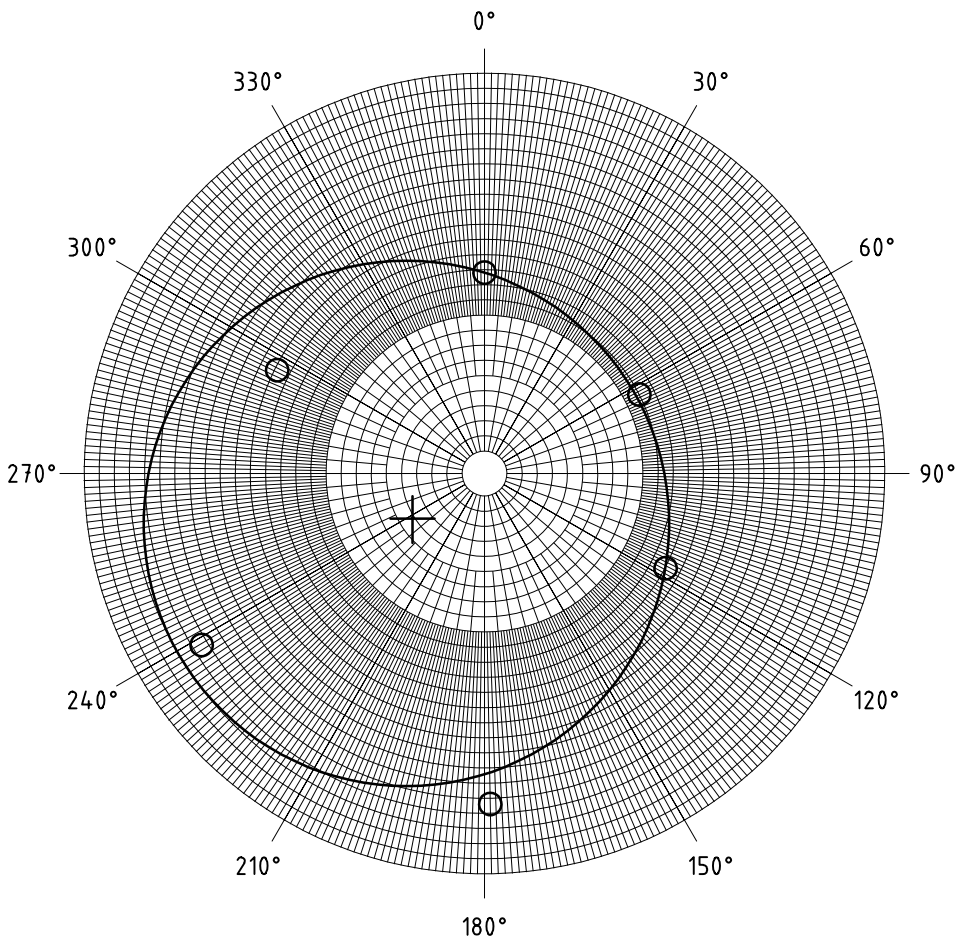

Figure J.4 — Sample best-fit circle for residual unbalance

Copyright American Petroleum Institute
Reproduced by IHS under license with API
Document provided by IHS Licensee=TECNA/5935100001, 11/02/2004 06:04:35 MST
Questions or comments about this message: please call the Document Policy Group

Annex K
(normative)

Seal chamber runout illustrations

The schematics in this annex illustrate the location of measurements required, not the method or orientation.

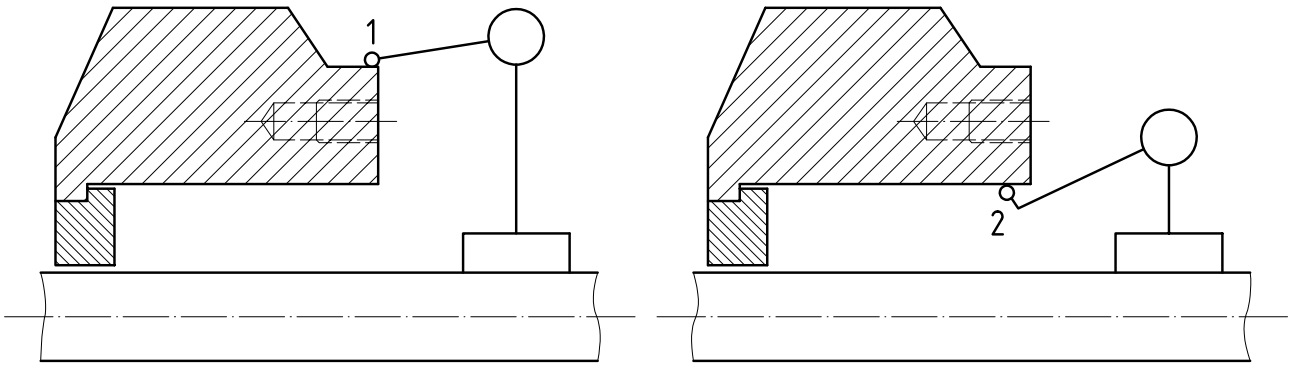

Key

1 location of outside diameter measurement

2 location of inside diameter measurement

Figure K.1 — Seal chamber concentricity (5.8.4)

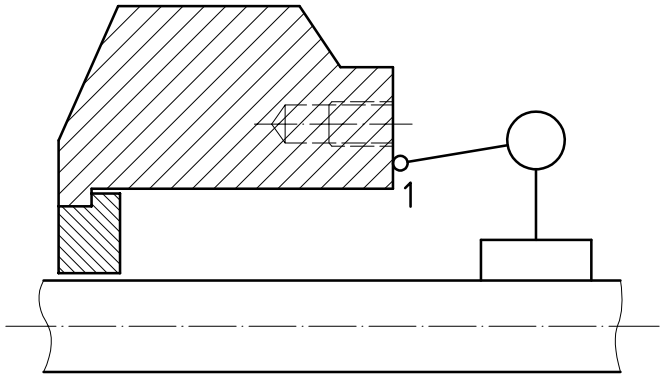

Key

1 location of face runout measurement

Figure K.2 — Seal chamber face runout (5.8.5)

Copyright American Petroleum Institute
Reproduced by IHS under license with API
Document provided by IHS Licensee=TECNA/5935100001, 11/02/2004 06:04:35 MST
Questions or comments about this message: please call the Document Policy Group

Annex L
(informative)

Vendor drawing and data requirements

L.1 General

This annex consists of a distribution record (schedule), followed by a representative description of the items that are presented numerically in the schedule.

--`,`,`,`,```,,,`,,,`,,,,,`,,-`-`,,`,,`,`,,`---

Copyright American Petroleum Institute
Reproduced by IHS under license with API
Document provided by IHS Licensee=TECNA/5935100001, 11/02/2004 06:04:35 MST
Questions or comments about this message: please call the Document Policy Group

TYPICAL
VENDOR DRAWING AND DATA REQUIREMENTS

JOB NO. _____ ITEM NO. _____
PURCHASE ORDER NO. _____ DATE _____
REQUISITION NO. _____ DATE _____
ENQUIRY NO. _____ DATE _____

PAGE __1___ OF __2___ BY _____

FOR _____ REVISION _____
SITE _____ UNIT _____
SERVICE _____ NO. REQUIRED _____

Proposal [a] Bidder shall furnish _____ copies of data for all items indicated by an X.

Review [b] Vendor shall furnish _____ copies and _____ transparencies of drawings and data indicated.

Final [c] Vendor shall furnish _____ copies and _____ transparencies of drawings and data indicated.

Vendor shall furnish _____ operating and maintenance manuals.

DISTRIBUTION RECORD

Final – Received from vendor
Due from vendor [c]
Review – Returned from vendor
Review – Received from vendor
Review – Due from vendor [c]

			DESCRIPTION					
			Pump					
			1. Certified dimensional outline drawing					
			2. Cross-sectional drawings and bills of materials					
			3. Shaft seal drawing and bills of materials					
			4. Shaft coupling assembly drawing and bill of materials					
			5. Primary and auxiliary flush piping schematics and bills of materials					
			6. Cooling or heating schematic and bill of materials					
			7. Lubricating oil schematic and bill of materials					
			8. Lubricating oil system arrangement drawing					
			9. Lubricating oil component drawings					
			10. Electrical and instrumentation schematics, wiring diagrams, and bills of materials					
			11. Electrical and instrumentation arrangement drawing and list of connections					
			12. Performance curves					
			13. Vibration analysis data					
			14. Damped unbalanced response analysis					
			15. Lateral critical speed analysis					
			16. Torsional critical speed analysis					
			17. Certified hydrostatic test data					
			18. Material certifications					
			19. Progress reports					
			20. Weld procedures					
			21. Performance test data					
			22. Optional test data and reports					
			23. Certified rotor balance data for multistage pumps					
			24. Residual unbalance check					
			25. Rotor mechanical and electrical runout for pumps with noncontacting vibration probes					
			26. Data sheets applicable to proposals, purchase and as-built					
			27. Noise data sheets					
			28. As-built clearances					
			29. Installation, operation and maintenance manuals					
			30. Spare parts recommendations and price list					
			31. Preservation, packaging and shipping procedures					
			32. Material safety data sheets					

Copyright American Petroleum Institute
Reproduced by IHS under license with API
Document provided by IHS Licensee=TECNA/5935100001, 11/02/2004 06:04:35 MST
Questions or comments about this message: please call the Document Policy Group

TYPICAL
VENDOR DRAWING AND DATA REQUIREMENTS

JOB NO. _____ ITEM NO. _____
PURCHASE ORDER NO. _____ DATE _____
REQUISITION NO. _____ DATE _____
ENQUIRY NO. _____ DATE _____

PAGE __2___ OF __2___ BY _____

FOR _____ REVISION _____
SITE _____ UNIT _____
SERVICE _____ NO. REQUIRED _____

Proposal [a] Bidder shall furnish _____ copies of data for all items indicated by an X.

Review [b] Vendor shall furnish _____ copies and _____ transparencies of drawings and data indicated.

Final [c] Vendor shall furnish _____ copies and _____ transparencies of drawings and data indicated.

Vendor shall furnish _____ operating and maintenance manuals.

DISTRIBUTION RECORD

Final – Received from vendor
Due from vendor [c]
Review – Returned from vendor
Review – Received from vendor
Review – Due from vendor [c]

			DESCRIPTION					
			MOTOR					
			33. Certified dimensional outline drawing (magneric drive pumps only)					
			34. Cross-sectional drawing and bill of materials					
			35. Data sheets applicable to proposals, purchase and as-built					
			36. Noise data sheets					
			37. Performance data					
			38. Certified drawings of auxiliary systems					
			39. Installation operation and maintenance manuals					
			40. Spare parts recommendations and price list					
			41. Material safety data sheets					

[a] Proposal drawings and data do not have to be certified or as-built. Typical data shall be clearly identified as such.

[b] For single-stage units. These items normally provided only in instruction manuals.

[c] These items normally applicable for multistage units only.

Send all drawings and data to _____

_____

All drawings and data shall show project, appropriation, purchase order, and item numbers in addition to the plant location and unit. In addition to the copies specified above, one set of the drawings/instructions necessary for field installation shall be forwarded with the shipment.

Nomenclature:

_____ S — number of weeks prior to shipment.

_____ F — number of weeks after firm order.

_____ D — number of weeks after receipt of approved drawings.

Vendor _____

Date _____ Vendor reference _____

Signature _____

Copyright American Petroleum Institute
Reproduced by IHS under license with API
Document provided by IHS Licensee=TECNA/5935100001, 11/02/2004 06:04:35 MST
Questions or comments about this message: please call the Document Policy Group

L.2 Description

L.2.1 Pump

a) Certified dimensional outline drawing, including:

   1) size, rating and location of all purchaser connections;

   2) approximate overall and handling masses;

   3) overall dimensions, and maintenance and dismantling clearances;

   4) shaft centreline height;

   5) dimensions of baseplates (if furnished) complete with diameters, number and locations of boltholes, and the thicknesses of sections through which the bolts must pass;

   6) grouting details;

   7) forces and moments for suction and discharge nozzles;

   8) centre of gravity and lifting points;

   9) shaft end separation and alignment data;

   10) direction of rotation;

   11) winterization, tropicalization and/or noise attenuation details, if required.

b) cross-sectional drawings and bills of materials;

c) shaft seal drawing and bill of materials;

d) shaft coupling assembly drawing and bill of materials, including allowable misalignment tolerances and the style of the coupling guard;

e) primary and auxiliary sealing schematic and bill of materials, including seal fluid, fluid flows, pressure, pipe and valve sizes, instrumentation, and orifice sizes;

f) cooling or heating schematic and bill of materials, including cooling or heating media, fluid flows, pressure, pipe and valve sizes, instrumentation, and orifice sizes;

g) lubricating oil schematic and bill of materials, including the following:

   1) oil flowrates, temperatures and pressures at each use point;

   2) control, alarm and trip settings (pressure and recommended temperatures);

   3) total head loads;

   4) utility requirements, including electricity, water and air;

   5) pipe, valve and orifice sizes;

   6) instrumentation, safety devices, control schemes, and wiring diagrams.

h) lubricating oil system arrangement drawing, including size, rating, and location of all purchaser connections;

Copyright American Petroleum Institute
Reproduced by IHS under license with API
Document provided by IHS Licensee=TECNA/5935100001, 11/02/2004 06:04:35 MST
Questions or comments about this message: please call the Document Policy Group

i) lubricating oil component drawings and data, including the following:

   1) pumps and drivers;

   2) coolers, filters and reservoir;

   3) instrumentation;

   4) spare parts lists and recommendations.

j) electrical and instrumentation schematics, wiring diagrams and bills of materials, including the following:

   1) vibration alarm and shutdown limits;

   2) bearing temperature alarm and shutdown limits;

   3) lubricating oil temperature alarm and shutdown limits;

   4) driver.

k) electrical and instrumentation arrangement drawing and list of connections;

l) performance curves;

m) vibration analysis data;

n) damped unbalanced response analysis;

o) lateral critical speed analysis: the required number of lateral critical analysis reports, no later than 3 months after the date of order. The reports shall be as required in I.3.1.

p) torsional critical speed analysis: the required number of torsional critical analysis reports, no later than 3 months after the date of order. The reports shall be as required in 5.9.2.6.

q) certified hydrostatic test data;

r) material certifications: the vendor's physical and chemical data from mill reports (or certification) of pressure parts, impellers and shafts;

s) progress reports detailing the cause of any delays: the reports shall include engineering, purchasing, manufacturing and testing schedules for all major components. Planned and actual dates, and the percentage completed, shall be indicated for each milestone in the schedule.

t) weld procedures;

u) performance test data: certified shop logs of the performance test. A record of shop test data (which the vendor shall maintain for at least 20 years after the date of shipment). The vendor shall submit certified copies of the test data to the purchaser before shipment.

v) optional tests data and reports: optional tests data and reports include NPSHR test, complete unit test, sound level test, auxiliary equipment test, bearing housing resonance test, and any other tests mutually agreed upon by the purchaser and vendor;

w) certified rotor balance data for multistage pumps;

x) residual unbalance check;

y) rotor mechanical and electrical runout for pumps designed to use noncontacting vibration probes;

z) data sheets applicable to proposals, purchase, and as-built;

Copyright American Petroleum Institute
Reproduced by IHS under license with API
Document provided by IHS Licensee=TECNA/5935100001, 11/02/2004 06:04:35 MST
Questions or comments about this message: please call the Document Policy Group

aa) noise data sheets;

bb) as-built clearances;

cc) instruction manuals describing installation, operation and maintenance procedures. Each manual shall include the following sections:

1) Section 1 — Installation:

   i) storage;

   ii) foundation;

   iii) grouting;

   iv) setting equipment, rigging procedures, component masses and lifting diagram;

   v) alignment;

   vi) piping recommendations;

   vii) composite outline drawing for pump/driver train, including anchor-bolt locations;

   viii) dismantling clearances.

2) Section 2 — Operation:

   i) start-up, including tests and checks before start-up;

   ii) routine operational procedures;

   iii) lubricating oil recommendations.

3) Section 3—Disassembly and assembly:

   i) rotor in pump casing;

   ii) journal bearings;

   iii) thrust bearings (including clearance and preload on antifriction bearings);

   iv) seals;

   v) thrust collars, if applicable;

   vi) allowable wear of running clearances;

   vii) fits and clearances for rebuilding;

   viii) routine maintenance procedures and intervals.

4) Section 4 — Performance curves, including differential head, efficiency, water NPSHR, and brake horsepower versus flowrate for all operating conditions specified on the data sheets.

5) Section 5 — Vibration data:

   i) vibration analysis data;

   ii) lateral critical speed analysis;

   iii) torsional critical speed analysis.

Copyright American Petroleum Institute
Reproduced by IHS under license with API
Document provided by IHS Licensee=TECNA/5935100001, 11/02/2004 06:04:35 MST
Questions or comments about this message: please call the Document Policy Group

6) Section 6 — As-built data:

   i) as-built data sheets;

   ii) as-built clearances;

   iii) rotor balance data for multi-stage pumps;

   iv) noise data sheets;

   v) performance data.

7) Section 7 — Drawing and data requirements:

   i) certified dimensional outline drawing and list of connections;

   ii) cross-sectional drawing and bill of materials;

   iii) shaft seal drawing and bill of materials;

   iv) lubricating oil arrangement drawing and list of connections;

   v) lubricating oil component drawings and data, and bills of materials;

   vi) electrical and instrumentation schematics, wiring diagrams and bills of materials;

   vii) electrical and instrumentation arrangement drawing and list of connections;

   viii) coupling assembly drawing and bill of materials;

   ix) primary and auxiliary seal schematic and bill of materials;

   x) primary and auxiliary seal piping, instrumentation, arrangement and list of connections;

   xi) cooling and heating schematic and bill of materials;

   xii) cooling or heating piping, instrumentation arrangement and list of connections.

dd) spare parts recommendations and price list;

ee) preservation, packaging and shipping procedure;

ff) material safety data sheets.

L.2.2 Motor

a) Certified dimensional outline drawing for motor and all auxiliary equipment, including the following:

   1) size, location, and purpose of all purchaser connections, including conduit, instrumentation, and any piping or ducting;

   2) ASME rating and facing for any flanged connections;

   3) size and location of anchor bolt holes and thicknesses of sections through which bolts must pass;

   4) total mass of each item of equipment (motor and auxiliary equipment) plus loading diagrams, heaviest mass, and name of the part;

Copyright American Petroleum Institute
Reproduced by IHS under license with API
Document provided by IHS Licensee=TECNA/5935100001, 11/02/2004 06:04:35 MST
Questions or comments about this message: please call the Document Policy Group

5) overall dimensions and all horizontal and vertical clearances necessary for dismantling, and the approximate location of lifting lugs;

6) shaft centreline height;

7) shaft end dimensions, plus tolerances for the coupling;

8) direction of rotation.

b) cross-sectional drawing and bill of materials, including the axial rotor float;

c) data sheets applicable to proposals, purchase, and as-built;

d) noise data sheets;

e) performance data including the following:

1) for induction motors 150 kW (200 hp) and smaller:

i) efficiency and power factor at one-half, three-quarter, and full load;

ii) speed-torque curves.

2) for induction motors larger than 150 kW (200 hp) and larger, certified test reports for all test run and performance curves as follows:

i) time-current heating curve;

ii) speed-torque curves at 70 %, 80 %, 90 % and 100 % of rated voltage;

iii) efficiency and power factor curves from 0 to rated service factor;

iv) current versus load curves from 0 to rated service factor;

v) current versus speed curves from 0 to 100 % of rated speed.

f) certified drawings of auxiliary systems, including wiring diagrams, for each auxiliary system supplied. The drawings shall clearly indicate the extent of the system to be supplied by the manufacturer and the extent to be supplied by others;

g) motor instruction manuals describing installation, operating and maintenance procedures. Each manual shall include the following sections:

1) Section 1 — Installation:

i) storage;

ii) setting motor, rigging procedures, component masses and lifting diagram;

iii) piping and conduit recommendations;

iv) composite outline drawing for motor, including locations of anchor-bolt holes;

v) dismantling clearances.

Copyright American Petroleum Institute
Reproduced by IHS under license with API
Document provided by IHS Licensee=TECNA/5935100001, 11/02/2004 06:04:35 MST
Questions or comments about this message: please call the Document Policy Group

2) Section 2 — Operation:

   i) start-up, including check before start-up;

   ii) normal shutdown;

   iii) operating limits, including number of successive starts;

   iv) lubricating oil recommendations.

3) Section 3 — Disassembly and assembly instructions:

   i) rotor in motor;

   ii) journal bearings;

   iii) seals;

   iv) routine maintenance procedures and intervals.

4) Section 4 — Performance data required by L.2.2 e).

5) Section 5 — Data sheets:

   i) as-built data sheets;

   ii) noise data sheets.

6) Section 6 — Drawing and data requirements:

   i) certified dimensional outline drawing for motor and all auxiliary equipment, with list of connections;

   ii) cross-sectional drawing and bill of materials.

h) spare parts recommendations and price list;

i) material safety data sheets.

--`,`,`,`,```,,,`,,,`,,,,,`,,-`-`,,`,,`,`,,`---

Copyright American Petroleum Institute
Reproduced by IHS under license with API

Document provided by IHS Licensee=TECNA/5935100001, 11/02/2004 06:04:35 MST
Questions or comments about this message: please call the Document Policy Group

Annex M
(informative)

Test data summary

TEST DATA SUMMARY	
Customer	Curve No.
Purchaser	Test date
Purchase order No.	
Item No.	Certified by:
Pump serial No.	(Vendor representative)
Size and type	Witnessed by:
No. of stages	(Purchaser representative)

Overall Pump Performance (Table 14)				
	Rated	Tested	Actual deviation +/- %	Acceptance tolerance +/- %
Flow				
Head				
Power				
NPSHR				
Shutoff head				
Speed, r/min				

Pump Construction Data			
Stage 1		Series stages	
Impeller diameter	mm (in)	Impeller diameter	mm (in)
Impeller pattern No.		Impeller pattern No.	
No. of vanes		No. of vanes	
Volute/diffuser pattern No.		Volute/diffuser pattern No.	
Blade tip clearance (5.1.17)	%	Blade tip clearance (5.1.17)	%

Copyright American Petroleum Institute
Reproduced by IHS under license with API
Document provided by IHS Licensee=TECNA/5935100001, 11/02/2004 06:04:35 MST
Questions or comments about this message: please call the Document Policy Group

Mechanical Performance						
Maximum vibration levels recorded within specified flow region (5.9.3)						
	Rated flow		Preferred operating region		Allowable operating region	
	Tested	Specified	Tested	Specified	Tested	Specified
Housing velocity: Drive end: Overall/filtered						
Non-drive end: Overall/filtered						
Shaft displacement: Drive end: Overall/filtered						
Non-drive end: Overall/filtered						

Bearing Temperatures °C (°F) [5.10.2.4, 8.2.5.2.d) and 8.2.5.3]			
Pressurized lubrication systems		Ring oil or splash lubrication	
Ambient temp.		Ambient temp.	
Oil temp. rise		Oil temp. rise	
Oil return temp.		Oil sump temp.	
Max. bearing metal temp.			
Drive end journal			
Non-drive end journal			
Thrust bearing			

This mechanical performance summary is for recording test levels for each operating region relative to specified values. It is not intended to replace shop test data logs.

Units of measurement shall be mm/s (in/s) RMS for velocity, mm (mils) peak/peak for displacement, and °C (°F) for temperature.

Figure M.1 — Test data summary form (*continued*)

Copyright American Petroleum Institute
Reproduced by IHS under license with API
Document provided by IHS Licensee=TECNA/5935100001, 11/02/2004 06:04:35 MST
Questions or comments about this message: please call the Document Policy Group

Pump serial No. _____	Pumped liquid _____	**Curve No.**
Size and type _____	Relative density _____	Rated Point
No. of stages _____	Temperature _____ °C	Flowrate m^3/h = 180,0
Speed, r/min _____	Kinematic viscosity _____ mm^2/s	Head m = 94
Impeller No. _____	Impeller eye area _____ mm^2	NPSHR m = 6,3
		Power kW = 55,9
		Calculated efficiency %: 82,3 Ref.

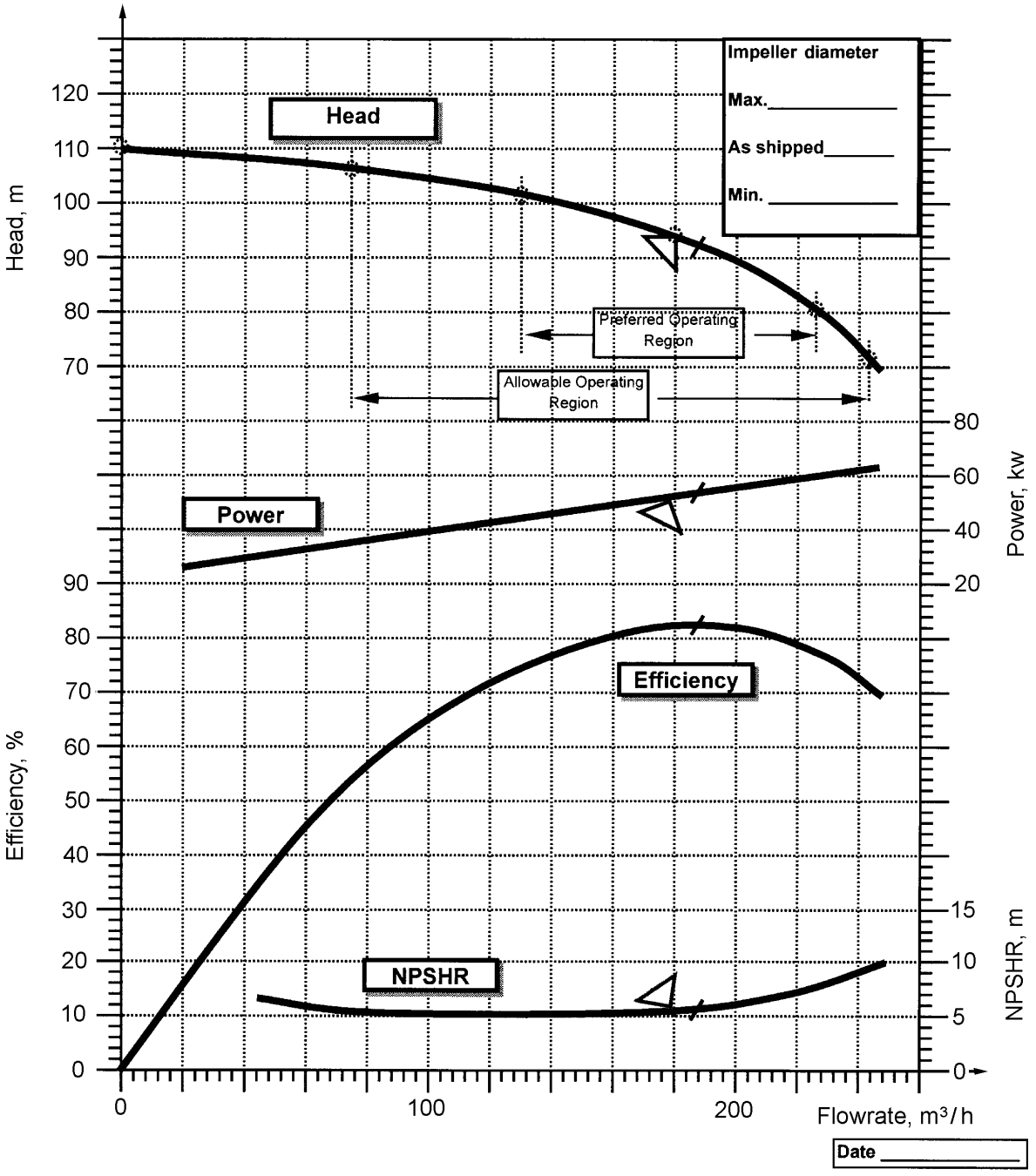

NOTE Values for scales, flow, head, NPSHR, power efficiency are for illustration only.

Figure M.2 — Example of test curve format – SI Units

Copyright American Petroleum Institute
Reproduced by IHS under license with API
Document provided by IHS Licensee=TECNA/5935100001, 11/02/2004 06:04:35 MST
Questions or comments about this message: please call the Document Policy Group

Pump serial No. _____	Pumped liquid _____				Rated Point
Size and type _____	Specific gravity _____		Flowrate	U.S. gal/min =	900,0
No. of stages _____	Temperature _____	°F	Head	ft =	325
Speed, r/min _____	Kinematic viscosity _____	cSt	NPSHR	ft =	17,1
Impeller No. _____	Impeller eye area_____	in^2	Power	bhp =	72,4
			Calculated efficiency %:		88,3 Ref.

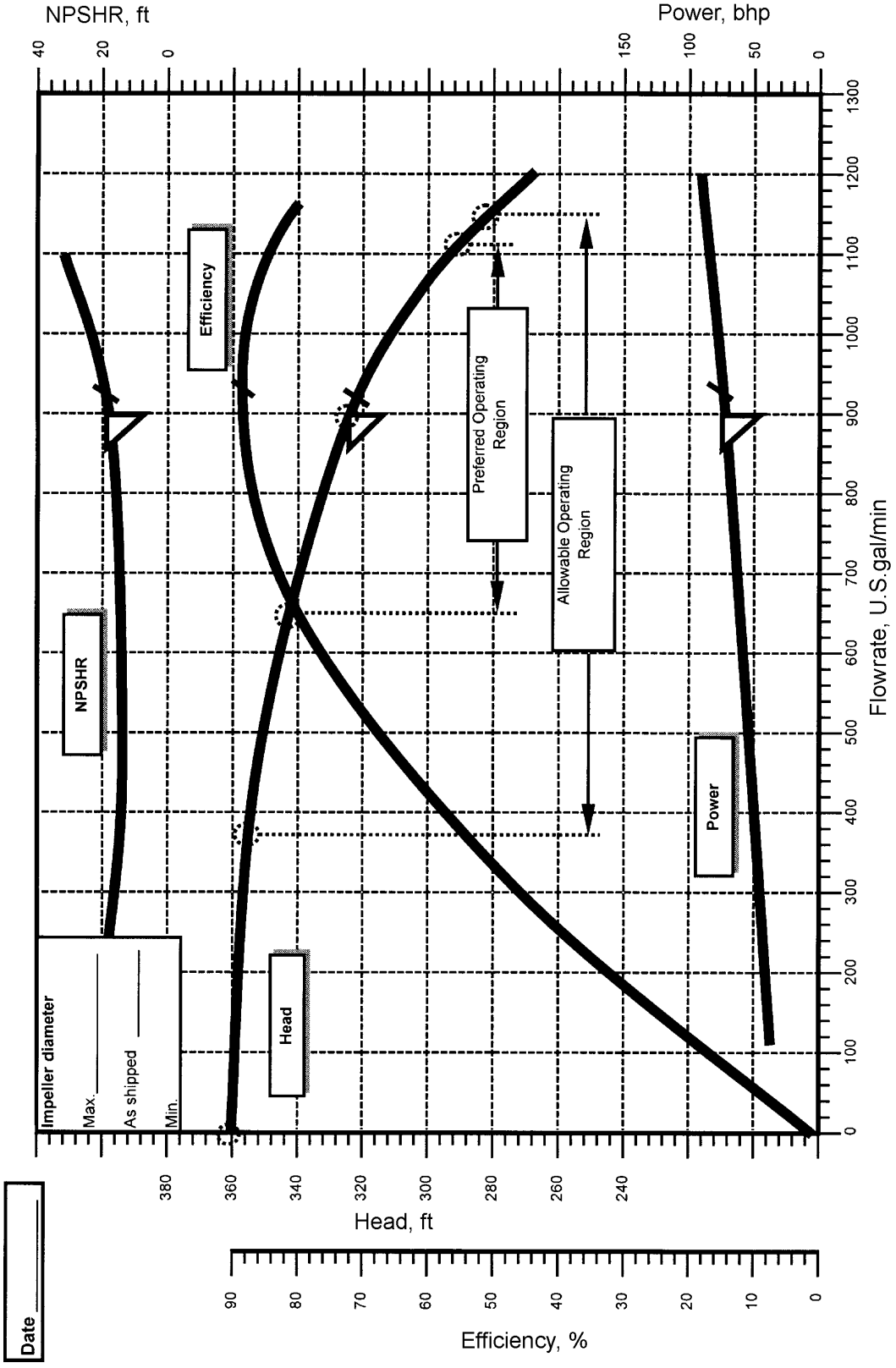

Figure M.3 — Test curve format — USC units

Copyright American Petroleum Institute
Reproduced by IHS under license with API
Document provided by IHS Licensee=TECNA/5935100001, 11/02/2004 06:04:35 MST
Questions or comments about this message: please call the Document Policy Group

Annex N
(informative)

Pump datasheets

Copyright American Petroleum Institute
Reproduced by IHS under license with API
Document provided by IHS Licensee=TECNA/5935100001, 11/02/2004 06:04:35 MST
Questions or comments about this message: please call the Document Policy Group

Centrifugal pump process data sheet — SI units

PAGE 1 OF

JOB NO. ITEM NO.(S)
REQ. / SPEC. NO. /
PURCH. ORDER NO. DATE
ENQUIRY NO. BY

1 APPLICABLE TO: ○ PROPOSALS ○ PURCHASE ◯ AS BUILT
2 FOR UNIT
3 SITE SERVICE
4 NOTES: INFORMATION BELOW TO BE COMPLETED: ○ BY PURCHASER ☐ BY MANUFACTURER ◯ BY MANUFACTURER OR PURCHASER

5 ○ **DATA SHEETS**

6		ITEM NO.	ATTACHED	ITEM NO.	ATTACHED	ITEM NO.	ATTACHED
7	PUMP		○		○		○
8	MOTOR		○		○		○
9	GEAR		○		○		○
10	TURBINE		○		○		○

11 APPLICABLE OVERLAY STANDARD(S):

REVISIONS

NO.	DATE	BY
1		
2		
3		
4		
5		

12 ○ **OPERATING CONDITIONS (5.1.3)**
13 FLOW, NORMAL (m^3/h) RATED (m^3/h)
14 OTHER
15
15 SUCTION PRESSURE MAX./RATED / (MPa)
16 DISCHARGE PRESSURE (MPa)
17 DIFFERENTIAL PRESSURE (MPa)
18 DIFF. HEAD (m) NPSHA (m)
19 PROCESS VARIATIONS (5.1.4)
20 STARTING CONDITIONS (5.1.4)
21 SERVICE: ○ CONT. ○ INTERMITTENT (STARTS/DAY)
22 ○ PARALLEL OPERATION REQ'D (5.1.13)

23 ○ **SITE DATA (5.1.3)**
24
24 **LOCATION: (5.1.30)**
25 ○ INDOOR ○ HEATED ○ OUTDOOR ○ UNHEATED
26 ○ ELECTRICAL AREA CLASSIFICATION (5.1.24 / 6.1.4)
27 CL GR DIV
28 ○ WINTERIZATION REQ'D ○ TROPICALIZATION REQ'D.
29 **SITE DATA (5.1.30)**
30 ○ ALTITUDE (m) BAROMETER (MPa)
31 ○ RANGE OF AMBIENT TEMPS: MIN./MAX. / (°C)
32 ○ RELATIVE HUMIDITY: MIN. / MAX. / (%)
33 **UNUSUAL CONDITIONS: (5.1.30)** ○ DUST ○ FUMES
34 ○ OTHER
35
36

37 ○ **DRIVER TYPE**
38 ○ INDUCTION MOTOR ○ STEAM TURBINE ○ GEAR
39 ○ OTHER
40

41 ○ **MOTOR DRIVER (6.1.1 / 6.1.4)**
42 ◯ MANUFACTURER
43 ☐ (kW) ☐ (r/min)
44 ☐ FRAME ◯ ENCLOSURE
45 ◯ HORIZONTAL ◯ VERTICAL ◯ SERVICE FACTOR
46 ◯ VOLTS/PHASE/HERTZ / /
47 ○ TYPE
48 ○ MINIMUM STARTING VOLTAGE (6.1.5)
49 ◯ INSULATION ○ TEMP. RISE
50 ◯ FULL LOAD AMPS
51 ◯ LOCKED ROTOR AMPS
52 ◯ STARTING METHOD
53 ◯ LUBE
54
54 BEARINGS (TYPE/NUMBER):
55 ☐ RADIAL /
56 ☐ THRUST /
57 ☐ VERTICAL THRUST CAPACITY
58 UP (N) DOWN (N)
59
60

○ **LIQUID (5.1.3)**
LIQUID TYPE OR NAME
○ HAZARDOUS ○ FLAMMABLE ○ (5.1.5)

	MIN.	NORMAL	MAX.
PUMPING TEMP (°C)			
VAPOUR PRESS. (MPa)			
RELATIVE DENSITY (SG):			
VISCOSITY (mPa·s)			

SPECIFIC HEAT, Cp (kJ/kg·K)
○ CHLORIDE CONCENTRATION (6.5.2.4) (mg/kg)
○ H_2S CONCENTRATION (mol fraction) WET (5.12.1.12c)
CORROSIVE / EROSIVE AGENT (5.12.1.9)

MATERIALS (5.12.1.1)
○ ANNEX H CLASS (5.12.1.1)
○ MIN DESIGN METAL TEMP (5.12.4.1) (°C)
○ REDUCED-HARDNESS MATERIALS REQ'D. (5.12.1.12)
☐ BARREL/CASE IMPELLER
☐ CASE/IMPELLER WEAR RINGS
☐ SHAFT
☐ DIFFUSERS

◯ **PERFORMANCE:**
PROPOSAL CURVE NO. ☐ r/min
☐ IMPELLER DIA. RATED MAX. MIN. (mm)
☐ IMPELLER TYPE
☐ RATED POWER (kW) EFFICIENCY (%)
☐ MINIMUM CONTINUOUS FLOW:
THERMAL (m^3/h) STABLE (m^3/h)
☐ PREFERRED OPER. REGION TO (m^3/h)
☐ ALLOWABLE OPER. REGION TO (m^3/h)
☐ MAX. HEAD @ RATED IMPELLER (m)
☐ MAX. POWER @ RATED IMPELLER (kW)
☐ NPSHR AT RATED FLOW (m) (5.1.10)
◯ MAX. SUCTION SPECIFIC SPEED: (5.1.11)
◯ MAX. SOUND PRESS. LEVEL REQ'D (dBA) (5.1.16)
◯ EST. MAX. SOUND PRESS. LEVEL (dBA) (5.1.16)
◯ EST. MAX. SOUND POWER LEVEL (dBA) (5.1.16)

○ **UTILITY CONDITIONS (5.1.3)**

ELECTRICITY	VOLTAGE	PHASE	HERTZ
DRIVERS			
HEATING			

SYSTEM VOLTAGE DIP ○ 80% ○ OTHER (6.1.5)

STEAM	MAX. PRESS.	MAX. TEMP.	MIN. PRESS.	MIN. TEMP.
DRIVERS				
HEATING				

COOLING WATER: (5.1.19) SOURCE
SUPPLY TEMP. (°C) MAX. RETURN TEMP. (°C)
NORM. PRESS. (MPa) DESIGN PRESS. (MPa)
MIN. RET. PRESS. (MPa) MAX. ALLOW. D.P. (MPa)
CHLORIDE CONCENTRATION: (mg/kg)

Figure N.1 — Data sheets, SI units

Copyright American Petroleum Institute
Reproduced by IHS under license with API
Document provided by IHS Licensee=TECNA/5935100001, 11/02/2004 06:04:35 MST
Questions or comments about this message: please call the Document Policy Group

PAGE 2 OF ___

REMARKS

Figure N.1 (*continued*)

Copyright American Petroleum Institute
Reproduced by IHS under license with API

Document provided by IHS Licensee=TECNA/5935100001, 11/02/2004 06:04:35 MST
Questions or comments about this message: please call the Document Policy Group

Centrifugal pump data sheet — Single-stage overhung (type OH) — SI units

PAGE 3 OF

JOB NO. ITEM NO.(S)

REQ. / SPEC. NO. /

PURCH. ORDER NO. DATE

ENQUIRY NO. BY

CONSTRUCTION

ROTATION: (VIEWED FROM COUPLING END) ☐ CW ☐ CCW

PUMP TYPE: (4.1)

☐ OH2 ☐ OH3 ☐ OH6 ☐ OTHER

CASING MOUNTING:

☐ CENTRELINE ☐ IN-LINE ☐ OTHER

CASING TYPE:

☐ SINGLE VOLUTE ☐ MULTIPLE VOLUTE ☐ DIFFUSER

CASE PRESSURE RATING:

○ OH6 PUMP SUCTION REGION DESIGNED FOR MAWP (5.3.6)

☐ MAX. ALLOWABLE WORKING PRESSURE (MPa)

@ (°C)

☐ HYDROTEST PRESSURE (MPa)

☐ **NOZZLE CONNECTIONS: (5.4.2)**

	SIZE	FLANGE RATING	FAC'G	POSITION
SUCTION				
DISCHARGE				

PRESSURE CASING AUX. CONNECTIONS: (5.4.3)

	NO.	SIZE (DN)	TYPE
☐ DRAIN			
☐ VENT			
☐ WARM-UP			

☐ MACHINED AND STUDDED CONNECTIONS (5.4.3.8)

○ CYLINDRICAL THREADS REQUIRED (5.4.3.3)

ROTOR:

○ COMPONENT BALANCE TO ISO 1940 G1.0 (5.9.4.4)

COUPLINGS:(6.2.2)

○ MANUFACTURER ☐ MODEL

☐ RATING (kW per 100 r/min)

☐ SPACER LENGTH (mm) ☐ SERVICE FACT.

○ COUPLING BALANCED TO ISO 1940-1 G6.3 (6.2.3)

○ COUPLING WITH PROPRIETARY CLAMPING DEVICE (6.2.11)

○ COUPLING PER ISO 14691 (6.2.4)

○ COUPLING PER ISO 10441 (6.2.4)

○ COUPLING PER API 671 (6.2.4) ○ ASME B15.1

○ NON-SPARK COUPLING GUARD (6.2.14c)

○ COUPLING GUARD STANDARD PER (6.2.14a)

BASEPLATES:

☐ API BASEPLATE NUMBER (ANNEX D)

○ NON-GROUT CONSTRUCTION (6.3.13)

○ OTHER

MECHANICAL SEAL: (5.8.1)

○ SEE ATTACHED ISO 21049/API 682 DATA SHEET

SURFACE PREPARATION AND PAINT

○ MANUFACTURER'S STANDARD ○ OTHER (SEE BELOW)

○ SPECIFICATION NO.

PUMP:

○ PRIMER

○ FINISH COAT

BASEPLATE: (6.3.17)

○ PRIMER

○ FINISH COAT

○ DETAILS OF LIFTING DEVICES(6.3.20)

SHIPMENT: (7.4.1)

○ DOMESTIC ○ EXPORT ○ EXPORT BOXING REQUIRED

○ OUTDOOR STORAGE MORE THAN 6 MONTHS

SPARE ROTOR ASSEMBLY PACKAGED FOR:

○ HORIZONTAL STORAGE ○ VERTICAL STORAGE

○ TYPE OF SHIPPING PREPARATION

HEATING AND COOLING

○ HEATING JACKET REQ'D. (5.8.9)

☐ COOLING REQ'D.

☐ COOLING WATER (C.W.) PIPING PLAN (6.5.3.1)

C.W. PIPING:

☐ PIPE ☐ TUBING; FITTINGS

C.W. PIPING MATERIALS:

☐ S. STEEL ☐ C. STEEL ☐ GALVANIZED

COOLING WATER REQUIREMENTS:

☐ BEARING HOUSING (m^3/h)

HEAT EXCHANGER (m^3/h)

TOTAL COOLING WATER (m^3/h)

HEAT MEDIUM: ○ STEAM ○ OTHER

HEATING PIPING: ○ TUBING ○ PIPE

BEARINGS AND LUBRICATION

BEARING (TYPE/NUMBER) (5.10.1):

☐ RADIAL /

☐ THRUST /

LUBRICATION (5.11.3, 5.11.4):

☐ GREASE ☐ OIL

○ PURGE OIL MIST ○ PURE OIL MIST

○ CONSTANT LEVEL OILER PREFERENCE (5.10.2.2):

☐ OIL VISC. ISO GRADE

INSTRUMENTATION

○ ACCELEROMETER (6.4.2.1)

○ PROVISION FOR MOUNTING ONLY (5.10.2.11)

○ FLAT SURFACE REQ'D (5.10.2.12)

○ TEMP. GAUGES (WITH THERMOWELLS) (8.1.3.6)

○ PRESSURE GAUGE TYPE

REMARKS:

MASSES (kg)

PUMP

BASEPLATE

DRIVER

TOTAL

Figure N.1 (*continued*)

Copyright American Petroleum Institute
Reproduced by IHS under license with API

Document provided by IHS Licensee=TECNA/5935100001, 11/02/2004 06:04:35 MST
Questions or comments about this message: please call the Document Policy Group

PAGE 4 OF ___

SPARE PARTS (TABLE 18)

○ START-UP ○ NORMAL MAINTENANCE

○

OTHER PURCHASER REQUIREMENTS

○ COORDINATION MEETING REQUIRED (9.1.3)
○ MAXIMUM DISCHARGE PRESSURE TO INCLUDE (5.3.2)
  ○ MAX RELATIVE DENSITY
  ○ MAX DIA. IMPELLERS AND/OR NO. OF STAGES
  ○ OPERATION TO TRIP SPEED
○ OH3 BEARING HS6 LIFTER (8.1.2.6)
○ CONNECTION DESIGN APPROVAL (5.12.3.4)
◯ TORSIONAL ANALYSIS REQUIRED (5.9.2.1)
○ TORSIONAL ANALYSIS REPORT (5.9.2.6)
○ PROGRESS REPORTS (9.3.3)
○ OUTLINE OF PROCEDURES FOR OPTIONAL TESTS (9.2.5)
○ ADDITIONAL DATA REQUIRING 20 YEARS RETENTION (7.2.1.1f)

PIPING AND APPURTENANCES

MANIFOLD PIPING TO SINGLE CONNECTION (6.5.1.6)
  ◯ VENT ◯ DRAIN ◯ COOLING WATER
◯ MOUNT SEAL RESERVOIR OFF BASEPLATE (6.5.1.4)
◯ FLANGES REQ'D IN PLACE OF SOCKET WELD UNIONS (6.5.2.8)
◯ INSTALLATION LIST IN PROPOSAL (9.2.3L)
CONNECTION BOLTING
  ○ PTFE COATING ○ ASTM A153 GALVANIZED
  ○ PAINTED ○ SS

QA INSPECTION AND TESTING

○ SHOP INSPECTION (7.1.4)
○ PERFORMANCE CURVE APPROVAL
◯ TEST WITH SUBSTITUTE SEAL (7.3.3.2b)
○ MATERIAL CERTIFICATION REQUIRED (5.12.1.8)
  ○ CASING ○ IMPELLER ○ SHAFT
  ○ OTHER _____
○ CASTING REPAIR PROCEDURE APPROVAL REQ'D (5.12.2.5)
◯ INSPECTION REQUIRED FOR CONNECTION WELDS (5.12.3.4e)
  ◯ MAG. PARTICLE ◯ LIQUID PENETRANT
  ◯ RADIOGRAPHIC ◯ ULTRASONIC
◯ INSPECTION REQUIRED FOR CASTINGS (7.2.1.3 / 5.12.1.5)
  ◯ MAG. PARTICLE ◯ LIQUID PENETRANT
  ◯ RADIOGRAPHIC ◯ ULTRASONIC
○ HARDNESS TEST REQUIRED: _____ (7.2.2.3)
○ ADDITIONAL SUBSURFACE EXAMINATION FOR 7.2.1.3
  FOR _____
  METHOD _____

QA INSPECTION AND TESTING (CONT.)

TEST	NON-WIT	WIT	OBSERVE
○ HYDROSTATIC (7.3.2)	○	○	○
○ PERFORMANCE (7.3.3)	○	○	○
○ RETEST ON SEAL LEAKAGE (7.3.3.2d)	○	○	○
○ NPSH (7.3.4.2)	○	○	○
○ TRUE PEAK VELOCITY DATA (7.3.3.4d)	○	○	○
○ COMPLETE UNIT TEST (7.3.4.3)	○	○	○
○ SOUND LEVEL TEST (7.3.4.4)	○	○	○
○ CLEANLINESS PRIOR TO FINAL ASSEMBLY (7.2.2.2)	○	○	○
○ NOZZLE LOAD TEST (6.3.6)	○	○	○
○ CHECK FOR CO-PLANAR MOUNTING PAD SURFACES (6.3.3)	○	○	○
○ MECHANICAL RUN UNTIL OIL TEMP. STABLE (7.3.4.7.1)	○	○	○
○ 4 h MECHANICAL RUN AFTER OIL TEMP. STABLE (7.3.4.7.3)	○	○	○
○ 4 h MECH. RUN TEST(7.3.4.7.2)	○	○	○
○ BRG HSG RESONANCE TEST (7.3.4.6)	○	○	○
○ AUXILIARY EQUIPMENT TEST (7.3.4.5)	○	○	○
◯ IMPACT TESTING (5.12.4.3)	○	○	○
○ PER EN 13445			
○ PER ASME VIII			
○ _____	○	○	○

○ VENDOR KEEP REPAIR AND HT RECORDS (7.2.1.1c)
○ VENDOR SUBMIT TEST PROCEDURES (7.3.1.2 / 9.2.5)
○ VENDOR SUBMIT TEST DATA WITHIN 24 h (7.3.3.3e)
○ INCLUDE PLOTTED VIBRATION SPECTRA (5.9.3.3)
○ SUBMIT INSPECTION CHECK LIST (7.1.6)

REMARKS

Figure N.1 (*continued*)

Copyright American Petroleum Institute
Reproduced by IHS under license with API
Document provided by IHS Licensee=TECNA/5935100001, 11/02/2004 06:04:35 MST
Questions or comments about this message: please call the Document Policy Group

PAGE 3 OF

Centrifugal pump data sheet — Between bearings (type BB) — SI units

JOB NO. ITEM NO.(S)
REQ. / SPEC. NO. /
PURCH. ORDER NO. DATE
ENQUIRY NO. BY

CONSTRUCTION

ROTATION: (VIEWED FROM COUPLING END) ☐ CW ☐ CCW

PUMP TYPE: (4.1)
☐ BB1 ☐ BB2 ☐ BB3 ☐ BB5

CASING MOUNTING:
☐ CENTRELINE ☐ NEAR CENTERLINE
☐ FOOT

CASING SPLIT:
☐ AXIAL ☐ RADIAL

CASING TYPE:
☐ SINGLE VOLUTE ☐ MULTIPLE VOLUTE ☐ DIFFUSER
☐ BETWEEN BEARINGS ☐ BARREL

CASE PRESSURE RATING:
☐ MAX. ALLOWABLE WORKING PRESSURE (MPa)
@ (°C)
☐ HYDROTEST PRESSURE (MPa)
○ SUCTION PRESS. REGIONS MUST BE DESIGNED FOR MAWP (5.3.6)

☐ **NOZZLE CONNECTIONS: (5.4.2)**

	SIZE (DN)	FLANGE RATING	FACING	POSITION
SUCTION				
DISCHARGE				
BALANCE DRUM				

PRESSURE CASING AUX. CONNECTIONS: (5.4.3)

	NO.	SIZE (DN)	TYPE
☐ DRAIN			
☐ VENT			
☐ PRESS. GAUGE			
☐ TEMP. GAUGE			
☐ WARM-UP			
☐ BALANCE / LEAK-OFF			

☐ MACHINED AND STUDDED CONNECTIONS (5.4.3.8)
○ CYLINDRICAL THREADS REQUIRED (5.4.3.3)

ROTOR:
○ COMPONENT BALANCE TO ISO 1940 G1.0 (5.9.4.4)
○ SHRINK FIT -LIMITED MOVEMENT IMPELLERS (8.2.2.3)

COUPLINGS: (6.2.2)
○ MANUFACTURER ☐ MODEL
☐ RATING (kW per 100 r/min)
☐ SPACER LENGTH (mm) ☐ SERVICE FACTOR
DRIVER HALF-COUPLING MOUNTED BY:
○ PUMP MFR. ○ DRIVER MFR. ○ PURCHASER
○ COUPLING WITH HYDRAULIC FIT (6.2.10)
○ COUPLING BALANCED TO ISO 1940-1 G6.3 (6.2.3)
○ COUPLING PER ISO 14691 (6.2.4)
○ COUPLING PER ISO 10441 (6.2.4)
○ COUPLING PER API 671 (6.2.4)
○ NON-SPARK COUPLING GUARD (6.2.14c)
○ COUPLING GUARD STANDARD PER (6.2.14a)

BASEPLATES:
☐ API BASEPLATE NUMBER (ANNEX D)
○ NON-GROUT CONSTRUCTION (6.3.13)
○ OTHER

MECHANICAL SEAL: (5.8.1)
○ SEE ATTACHED ISO 21049/API 682 DATA SHEET

SURFACE PREPARATION AND PAINT

○ MANUFACTURER'S STANDARD ○ OTHER (SEE BELOW)
○ SPECIFICATION NO.

PUMP:
○ PUMP SURFACE PREPARATION
○ PRIMER
○ FINISH COAT

BASEPLATE: (6.3.17)
○ BASEPLATE SURFACE PREPARATION
○ PRIMER
○ FINISH COAT
○ DETAILS OF LIFTING DEVICES (6.3.20)

SHIPMENT: (7.4.1)
○ DOMESTIC ○ EXPORT ○ EXPORT BOXING REQUIRED
○ OUTDOOR STORAGE MORE THAN 6 MONTHS

SPARE ROTOR ASSEMBLY PACKAGED FOR:
○ SHIPPING CONTAINER (8.2.8.3) ○ VERTICAL STORAGE (8.2.8.2)
○ TYPE OF SHIPPING PREPARATION ○ N_2 PURGE (8.2.8.4)

HEATING AND COOLING

○ HEATING JACKET REQ'D. (5.8.9) ☐ COOLING REQ'D.
☐ COOLING WATER (C.W.) PIPING PLAN (6.5.3.1)
C.W. PIPING:
☐ PIPE ☐ TUBING; FITTINGS
C.W. PIPING MATERIALS:
☐ S. STEEL ☐ C. STEEL ☐ GALVANIZED
COOLING WATER REQUIREMENTS:
☐ BEARING HOUSING (m^3/h) @ (MPa)
☐ HEAT EXCHANGER (m^3/h) @ (MPa)
STEAM PIPING: ○ TUBING ○ PIPE

BEARINGS AND LUBRICATION

BEARING (TYPE/NUMBER) (5.10.1):
☐ RADIAL /
☐ THRUST /
LUBRICATION (5.11.3, 5.11.4):
☐ RING OIL ☐ HYDRODYNAMIC ○ PURGE OIL MIST ○ PURE OIL MIST
○ CONSTANT LEVEL OILER PREFERENCE (5.10.2.2):
○ PRESSURE LUBE SYS. ISO 10438-3 ○ ISO 10438-2 (8.2.6.1/8.2.6.5)
☐ OIL VISC. ISO GRADE
○ OIL PRESS. TO BE GREATER THAN COOLANT PRESSURE
○ REVIEW AND APPROVE THRUST BEARING SIZE [8.2.5.2 d)]
☐ OIL HEATER REQUIRED: ○ STEAM ○ ELECTRIC

INSTRUMENTATION (6.4.2)

○ SEE ATTACHED API 670 DATA SHEET
○ ACCELEROMETER(S) (6.4.2.1)
○ PROVISION FOR VIBRATION PROBES (6.4.2.2)
○ RADIAL PER BRG. ○ AXIAL PER BRG.
○ PROVISION FOR MOUNTING ONLY (5.10.2.11)
○ FLAT SURFACE REQ'D (5.10.2.12)
○ RADIAL BEARING METAL TEMP. ○ THRUST BRG METAL TEMP.
○ TEMP. GAUGES (WITH THERMOWELLS)
○ MONITORS AND CABLES SUPPLIED BY (6.4.2.4)
REMARKS

MASSES (kg)

PUMP BASEPLATE
DRIVER TOTAL
GEAR

Figure N.1 (*continued*)

Copyright American Petroleum Institute
Reproduced by IHS under license with API
Document provided by IHS Licensee=TECNA/5935100001, 11/02/2004 06:04:35 MST
Questions or comments about this message: please call the Document Policy Group

PAGE 4 OF ___

SPARE PARTS (TABLE 18)

- ○ START-UP ○ NORMAL MAINTENANCE
- ○ SPECIFY _____

OTHER PURCHASER REQUIREMENTS

- ○ COORDINATION MEETING REQUIRED (9.1.3)
- ○ MAXIMUM DISCHARGE PRESSURE TO INCLUDE (5.3.2)
  - ○ MAX RELATIVE DENSITY
  - ○ MAX DIA. IMPELLERS AND/OR NO. OF STAGES
  - ○ OPERATION TO TRIP SPEED
- ○ CONNECTION DESIGN APPROVAL (5.12.3.4/8.2.1.4)
- ○ INERT GAS INHIBITED STORAGE - SPARE CARTRIDGE (8.2.8.4)
- ○ TORSIONAL ANALYSIS REQUIRED (5.9.2.1)
- ○ TORSIONAL ANALYSIS REPORT (5.9.2.6)
- ○ PROGRESS REPORTS (9.3.3)
- ○ OUTLINE OF PROCEDURES FOR OPTIONAL TESTS (9.2.5)
- ○ ADDITIONAL DATA REQUIRING 20 YEARS RETENTION (7.2.2.1f)
- ☐ LATERAL ANALYSIS REQUIRED (8.2.4.1 / 8.2.4.1.3)
- ☐ DYNAMIC BALANCE ROTOR (8.2.4.2)
- MANIFOLD PIPING TO SINGLE CONNECTION (6.5.1.6)
  - ☐ VENT ☐ DRAIN ☐ COOLING WATER
- ☐ MOUNT SEAL RESERVOIR OFF BASEPLATE (6.5.1.4)
- ☐ FLANGES REQ'D IN PLACE OF SOCKET WELD UNIONS (6.5.2.8)
- CONNECTION BOLTING
  - ○ PTFE COATING ○ ASTM A153 GALVANIZED
  - ○ PAINTED ○ SS
- ☐ INSTALLATION LIST IN PROPOSAL (9.2.3L)

QA INSPECTION AND TESTING

- ○ SHOP INSPECTION (7.1.4)
- ○ PERFORMANCE CURVE APPR.
- ☐ TEST WITH SUBSTITUTE SEAL (7.3.3.2)
- ○ MATERIAL CERTIFICATION REQUIRED (5.12.1.8)
  - ○ CASING ○ IMPELLER ○ SHAFT
  - ○ OTHER _____
- ○ CASTING REPAIR PROCEDURE APPROVAL REQ'D (5.12.2.5)
- ☐ INSPECTION REQUIRED FOR CONNECTION WELDS (5.12.3.4e)
  - ☐ MAG. PARTICLE ☐ LIQUID PENETRANT
  - ☐ RADIOGRAPHIC ☐ ULTRASONIC
- ☐ INSPECTION REQUIRED FOR CASTINGS (7.2.1.3)(5.12.1.5)
  - ☐ MAG. PARTICLE ☐ LIQUID PENETRANT
  - ☐ RADIOGRAPHIC ☐ ULTRASONIC
- ○ HARDNESS TEST REQUIRED: _____ (7.2.2.3)
- ○ ADDITIONAL SURFACE / SUBSURFACE EXAMINATION (7.2.1.3)
  - FOR _____
  - METHOD _____

QA INSPECTION AND TESTING (CONT.)

TEST	NON-WIT	WIT	OBSERVE
○ HYDROSTATIC (7.3.2)	○	○	○
○ PERFORMANCE (7.3.3)	○	○	○
○ NPSH (7.3.4.2)	○	○	○
○ RETEST ON SEAL L'KGE (7.3.3.2d)	○	○	○
○ RETEST REQUIRED AFTER FINAL HEAD ADJUSTMENT (7.3.3.5b)	○	○	○
○ COMPLETE UNIT TEST (7.3.4.3)	○	○	○
○ SOUND LEVEL TEST (7.3.4.4)	○	○	○
○ CLEANLINESS PRIOR TO FINAL ASSEMBLY (7.2.2.2)	○	○	○
○ NOZZLE LOAD TEST (6.3.6)	○	○	○
○ CHECK FOR CO-PLANAR MOUNTING PAD SURFACES (6.3.3)	○	○	○
○ MECHANICAL RUN UNTIL OIL TEMP. STABLE (7.3.4.7.1)	○	○	○
○ 4 h MECHANICAL RUN AFTER OIL TEMP. STABLE (7.3.4.7.3)	○	○	○
○ 4 h MECH. RUN TEST(7.3.4.7.2)	○	○	○
○ TRUE PEAK VELOCITY DATA (7.3.3.4d)	○	○	○
○ BRG HSG RESONANCE TEST (7.3.4.6)	○	○	○
○ REMOVE / INSPECT HYDRODYNAMIC BEARINGS AFTER TEST (8.2.7.5)	○	○	○
○ AUXILIARY EQUIPMENT TEST (7.3.4.5)	○	○	○
☐ CHARPY TEST (EN 13445/ASME VIII)	○	○	○
○ _____	○	○	○
○ _____	○	○	○
○ _____	○	○	○

- ○ VENDOR KEEP REPAIR AND HT RECORDS (7.2.1.1c)
- ○ VENDOR SUBMIT TEST PROCEDURES (7.3.1.2 / 9.2.5)
- ○ VENDOR SUBMIT TEST DATA WITHIN 24 h (7.3.3.3e)
- ○ INCLUDE PLOTTED VIBRATION SPECTRA (5.9.3.3)
- ○ RECORD FINAL ASSEMBLY RUNNING CLEARANCES
- ○ COMPLETION OF INSPECTION CHECK LIST (7.1.6)

REMARKS

Figure N.1 (*continued*)

Copyright American Petroleum Institute
Reproduced by IHS under license with API
Document provided by IHS Licensee=TECNA/5935100001, 11/02/2004 06:04:35 MST
Questions or comments about this message: please call the Document Policy Group

◯ Centrifugal pump data sheet — Vertically suspended (type VS) — SI units

PAGE 3 OF

JOB NO. ITEM NO.(S)

REQ. / SPEC. NO. /

PURCH. ORDER NO. DATE

ENQUIRY NO. BY

CONSTRUCTION

ROTATION: (VIEWED FROM CPLG END) ☐ CW ☐ CCW

PUMP TYPE: (1.3)

◯ VS1 ◯ VS2 ◯ VS3 ◯ VS4 ◯ VS5 ◯ VS6 ◯ VS7

CASING MOUNTING: ☐ SUMP COVER PLATE

☐ INLINE ☐ SEPARATE MOUNTING PLATE (8.3.8.3.1)

☐ SEPARATE SOLE PLATE (8.3.8.3.3)

CASING SPLIT:

☐ AXIAL ☐ RADIAL

CASING TYPE:

☐ SINGLE VOLUTE ☐ MULTIPLE VOLUTE ☐ DIFFUSER

CASE PRESSURE RATING:

☐ MAX ALLOWABLE WORKING PRESSURE _____ (MPa)

@ _____ (°C)

☐ HYDROTEST PRESSURE _____ (MPa)

○ SUCTION PRESS. REGIONS MUST BE DESIGNED FOR MAWP (5.3.6)

☐ **NOZZLE CONNECTIONS: (5.4.2)**

	SIZE (DN)	FLANGE RATING	FACING	POSITION
SUCTION				
DISCHARGE				
BALANCE DRUM				

PRESSURE CASING AUX. CONNECTIONS: (5.4.3)

	NO.	SIZE (DN)	TYPE
◯ DRAIN			
◯ VENT			
◯ WARM-UP			
◯ BALANCE / LEAK-OFF			

◯ MACHINED AND STUDDED CONNECTIONS (5.4.3.8)

○ CYLINDRICAL THREADS REQUIRED (5.4.3.3)

ROTOR:

○ COMPONENT BALANCE TO ISO 1940 G1.0 (5.9.4.4)

○ SHRINK FIT -LIMITED MOVEMENT IMPELLERS (8.2.2.3)

COUPLINGS:

○ MANUFACTURER _____ ◯ MODEL _____

☐ RATING (kW per 100 r/min) _____

◯ SPACER LENGTH _____ (mm) ◯ SERVICE FACTOR _____

◯ RIGID

THROUGH COUPLINGS:

○ MANUFACTURER _____ ◯ MODEL _____

☐ RATING (kW per 100 r/min) _____ ○ LUBE _____

◯ SPACER LENGTH _____ (mm) ◯ SERVICE FACTOR _____

◯ RIGID

DRIVER HALF-COUPLING MOUNTED BY:

○ PUMP MFR. ○ DRIVER MFR. ○ PURCHASER

○ COUPLING BALANCED TO ISO 1940-1 G.6.3 (6.2.3)

○ COUPLING PER ISO 14691 (6.2.4)

○ COUPLING PER ISO 10441 (6.2.4)

○ COUPLING PER API 671 (6.2.4)

○ NON-SPARK COUPLING GUARD (6.2.14c)

○ COUPLING GUARD STANDARD PER _____ (6.2.14a)

MECHANICAL SEAL:

○ SEE ATTACHED ISO 21049/API 682 DATA SHEET

_____

SURFACE PREPARATION AND PAINT

◯ MANUFACTURER'S STANDARD ○ OTHER (SEE BELOW)

PUMP:

_____

○ PUMP SURFACE PREPARATION _____

◯ PRIMER _____

○ FINISH COAT _____

BASEPLATE / COLUMN: (6.3.17)

○ BASEPLATE SURFACE PREPARATION _____

○ PRIMER _____

○ FINISH COAT _____

SHIPMENT: (7.4.1)

○ DOMESTIC ○ EXPORT ○ EXPORT BOXING REQUIRED

○ OUTDOOR STORAGE MORE THAN 6 MONTHS

SPARE ROTOR ASSEMBLY PACKAGED FOR:

○ HORIZONTAL STORAGE ○ VERTICAL STORAGE

○ TYPE OF SHIPPING PREPARATION _____

HEATING AND COOLING

○ HEATING JACKET REQ'D. (5.8.9) ◯ COOLING REQ'D.

◯ COOLING WATER PIPING PLAN (6.5.3.1) _____

C.W. PIPING:

◯ PIPE ◯ TUBING; FITTINGS _____

C.W. PIPING MATERIALS:

◯ S. STEEL ◯ C. STEEL ◯ GALVANIZED

COOLING WATER REQUIREMENTS:

☐ BEARING HOUSING _____ (m^3/h) @ _____ (MPa)

☐ HEAT EXCHANGER _____ (m^3/h) @ _____ (MPa)

STEAM PIPING: ○ TUBING ○ PIPE

BEARINGS AND LUBRICATION

BEARING (TYPE/NUMBER):

☐ RADIAL _____ /

☐ THRUST _____ /

LUBRICATION (5.11.3, 5.11.4):

◯ GREASE ◯ FLOOD ○ PURGE OIL MIST

◯ FLINGER ○ PURE OIL MIST

○ CONSTANT LEVEL OILER PREFERENCE (5.10.2.2): _____

◯ OIL VISC. ISO GRADE _____

○ REVIEW AND APPROVE THRUST BEARING SIZE

◯ OIL HEATER REQUIRED: ○ STEAM ○ ELECTRIC

INSTRUMENTATION (6.4.2)

○ ACCELEROMETER (6.4.2.1) _____

○ PROVISION FOR MOUNTING ONLY (5.10.2.11)

○ FLAT SURFACE REQ'D (5.10.2.12)

○ PRESSURE GAUGE TYPE _____

REMARKS: _____

MASSES (kg)

PUMP _____

DRIVER _____

GEAR _____

BASEPLATE _____

TOTAL _____

Figure N.1 (*continued*)

Copyright American Petroleum Institute
Reproduced by IHS under license with API

Document provided by IHS Licensee=TECNA/5935100001, 11/02/2004 06:04:35 MST
Questions or comments about this message: please call the Document Policy Group

PAGE 4 OF ___

SPARE PARTS (TABLE 18)

○ START-UP ○ NORMAL MAINTENANCE
○ SPECIFY _____

OTHER PURCHASER REQUIREMENTS

○ COORDINATION MEETING REQUIRED (9.1.3)
○ MAXIMUM DISCHARGE PRESSURE TO INCLUDE (5.3.2)
○ MAX. RELATIVE DENSITY
○ MAX. DIA. IMPELLERS AND/OR NO OF STAGES
○ OPERATION TO TRIP SPEED
○ CONNECTION DESIGN APPROVAL (5.12.3.4)
○ TORSIONAL ANALYSIS REQUIRED (5.9.2.1)
○ TORSIONAL ANALYSIS REPORT (5.9.2.6)
○ PROGRESS REPORTS (9.3.3)
○ OUTLINE OF PROCEDURES FOR OPTIONAL TESTS (9.2.5)
○ ADDITIONAL DATA REQUIRING 20 YEARS RETENTION (7.2.2.1f)
MANIFOLD PIPING TO SINGLE CONNECTION (6.5.1.6)
◯ VENT ◯ VENT ◯ COOLING WATER
◯ MOUNT SEAL RESERVOIR OFF BASEPLATE (6.5.1.4)
◯ FLANGES REQ'D IN PLACE OF SOCKET WELD UNIONS (6.5.2.8)
CONNECTION BOLTING ○ PTFE COATING ○ SS
○ PAINTED ○ ASTM A153 GALVANIZED
◯ INSTALLATION LIST IN PROPOSAL (9.2.3L)

○ **VERTICAL PUMPS**

☐ PUMP THRUST: (+) UP (-) DOWN
AT MIN. FLOW _____ (N) _____ (N)
AT RATED FLOW _____ (N) _____ (N)
MAX. THRUST _____ (N) _____ (N)
◯ SOLEPLATE REQ'D. (8.3.8.3.3) _____ (m) X _____ (m)
○ SEPARATE MOUNTING PLATE REQUIRED (8.3.8.3.1)
☐ SOLEPLATE THICKNESS _____ (mm)
COLUMN PIPE: ☐ FLANGED ☐ THREADED
☐ DIAMETER _____ (mm) LENGTH _____ (m)
GUIDE BUSHINGS ☐ ☐
☐ NUMBER _____
☐ LINE SHAFT BEARING SPACING _____ (mm)
GUIDE BUSHINGS LUBE:
☐ WATER ☐ OIL
☐ GREASE ☐ PUMPAGE
LINESHAFT: ◯ OPEN ◯ ENCLOSED
☐ LINE SHAFT DIAMETER: _____ (mm)
☐ TUBE DIAMETER: _____ (mm)
LINESHAFT COUPLING:
☐ LINE SHAFT DIAMETER: ☐ SLEEVE & KEY ☐ THREADED
☐ SUCTION CAN THICKNESS _____ (mm)
☐ LENGTH _____ (m)
☐ DIAMETER _____ (m)
○ SUCTION STRAINER TYPE _____
○ FLOAT & ROD ○ FLOAT SWITCH
○ IMPELLER COLLETS ACCEPTABLE (5.6.3)
○ HARDENED SLEEVES UNDER BEARINGS (8.3.10.5)

VERTICAL PUMPS (CONT.)

○ PUMP AND STRUCTURE DYNAMIC ANALYSIS (8.3.5)
○ DRAIN PIPED TO SURFACE (8.3.13.5)

QA INSPECTION AND TESTING

○ SHOP INSPECTION (7.1.4) ○ PERF. CURVE APPROVAL
◯ TEST WITH SUBSTITUTE SEAL (7.3.3.2b)

TEST	NON-WIT	WIT	OBSERVE
○ HYDROSTATIC TEST OF BOWLS AND COLUMN (8.3.13.2)	○	○	○
○ HYDROSTATIC (7.3.2)	○	○	○
○ PERFORMANCE (7.3.3)	○	○	○
○ RETEST ON SEAL LKGE (7.3.3.2d)	○	○	○
○ NPSH (7.3.4.2)	○	○	○
○ COMPLETE UNIT TEST (7.3.4.3)	○	○	○
○ SOUND LEVEL TEST (7.3.4.4)	○	○	○
○ CLEANLINESS PRIOR TO FINAL ASSEMBLY (7.2.2.2)	○	○	○
○ NOZZLE LOAD TEST (6.3.6)	○	○	○
○ 4 h MECH. RUN TEST (7.3.4.7.2)	○	○	○
○ MECHANICAL RUN UNTIL OIL TEMP. STABLE (7.3.4.7.1)	○	○	○
○ 4 h MECHANICAL RUN AFTER OIL TEMP. STABLE (7.3.4.7.3)	○	○	○
○ TRUE PEAK VELOCITY DATA (7.3.3.4.d)	○	○	○
○ RESONANCE TEST (8.3.9.2)	○	○	○
○ AUXILIARY EQUIPMENT TEST (7.3.4.5)	○	○	○
◯ IMPACT TESTING (5.12.4.3)	○	○	○

○ PER EN 13445
○ PER ASME VIII

○ VENDOR KEEP REPAIR AND HT RECORDS (7.2.1.1c)
○ VENDOR SUBMIT TEST PROCEDURES (7.3.1.2 / 9.2.5)
○ VENDOR SUBMIT TEST DATA WITHIN 24 h (7.3.3.3e)
○ INCLUDE PLOTTED VIBRATION SPECTRA (5.9.3.3)
○ RECORD FINAL ASSEMBLY RUNNING CLEARANCES
○ COMPLETION OF INSPECTION CHECK LIST (7.1.6)
○ MATERIAL CERTIFICATION REQUIRED (5.12.1.8)
○ CASING ○ IMPELLER ○ SHAFT
○ OTHER _____
○ CASTING REPAIR PROCEDURE APPROVAL REQ'D (5.12.2.5)
◯ INSPECTION REQUIRED FOR CONNECTION WELDS (5.12.3.4)
◯ MAG. PARTICLE ◯ LIQUID PENETRANT
◯ RADIOGRAPHIC ◯ ULTRASONIC
◯ INSPECTION REQUIRED FOR CASTINGS (7.2.1.3) (5.12.1.5)
◯ MAG. PARTICLE ◯ LIQUID PENETRANT
◯ RADIOGRAPHIC ◯ ULTRASONIC
○ HARDNESS TEST REQUIRED (7.2.2.3)
○ ADDITIONAL SUBSURFACE EXAMINATION (7.2.1.3)
FOR _____
METHOD _____

Sump arrangement

Key

1 grade
2 low liquid level
3 centreline of discharge
l_1 sump depth
l_2 pump length
l_3 centreline discharge height
l_4 height of grade above low liquid level
l_5 datum elevation, first-stage impeller
l_6 submergence required
Ød sump diameter

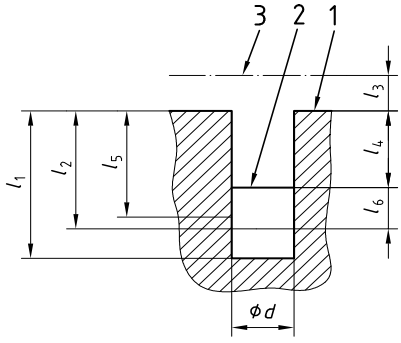

Refer to hydraulic institute standards for definitions

○ l_1 _____ m ☐ l_2 _____ m
○ Ød _____ m ☐ l_6 _____ m
○ l_4 _____ m ☐ l_3 _____ m
☐ l_5 _____ m

Figure N.1 (*continued*)

Copyright American Petroleum Institute
Reproduced by IHS under license with API
Document provided by IHS Licensee=TECNA/5935100001, 11/02/2004 06:04:35 MST
Questions or comments about this message: please call the Document Policy Group

Centrifugal pump — References

PAGE 5 OF

JOB NO. ITEM NO.(S)

REQ. / SPEC. NO. /

PURCH. ORDER NO. DATE

ENQUIRY NO. BY

☐ **PRESSURE DESIGN CODES**
○ **WELDING REQUIREMENTS**
◯ **PURCHASER-DEFINED MATERIAL INSPECTIONS**

APPLICABLE TO: ○ PROPOSALS ○ PURCHASE ◯ AS BUILT

FOR UNIT

SITE SERVICE

NOTES: INFORMATION BELOW TO BE COMPLETED: ○ BY PURCHASER ☐ BY MANUFACTURER ◯ BY MANUFACTURER OR PURCHASER

PRESSURE VESSEL DESIGN CODE REFERENCES.

☐ THESE REFERENCES MUST BE LISTED BY THE MANUFACTURER

CASTING FACTORS USED IN DESIGN (5.3.4) (TABLE 3)	☐
SOURCE OF MATERIAL PROPERTIES	☐

WELDING AND REPAIRS (5.12.3)

THESE REFERENCES MUST BE LISTED BY THE PURCHASER (DEFAULT TO TABLE 10 IF NO PURCHASER PREFERENCE IS STATED)

○ ALTERNATIVE WELDING CODES AND STANDARDS (5.12.3.1)

Welding Requirement (Applicable Code or Standard)	**Purchaser-defined**	**Default per Table 10**
Welder/operator qualification	○	○
Welding procedure qualification	○	○
Non-pressure-retaining structural welding such as baseplates or supports	○	○
Magnetic particle or liquid penetrant examination of the plate edges	○	○
Postweld heat treatment	○	○
Postweld heat treatment of casing fabrication welds	○	○

MATERIAL INSPECTION (7.2.2.1) (7.2.1.3)

THESE REFERENCES MUST BE LISTED BY THE PURCHASER (DEFAULT TO TABLE 13 IF NO PURCHASER PREFERENCE IS STATED)

○ ALTERNATIVE MATERIAL INSPECTIONS AND ACCEPTANCE CRITERIA (SEE TABLE 13)

Type of inspection	Methods	For fabrications	Castings
Radiography	○	○	○
Ultrasonic inspection	○	○	○
Magnetic particle inspection	○	○	○
Liquid penetrant inspection	○	○	○

REMARKS

Figure N.1 (*continued*)

Copyright American Petroleum Institute
Reproduced by IHS under license with API

Document provided by IHS Licensee=TECNA/5935100001, 11/02/2004 06:04:35 MST
Questions or comments about this message: please call the Document Policy Group

Centrifugal pump process data sheet — US customary units

PAGE 1 OF

JOB NO. ITEM NO.(S)

REQ. /SPEC. NO. /

PURCH. ORDER NO. DATE

ENQUIRY NO. BY

APPLICABLE TO: ○ PROPOSALS ○ PURCHASE ◎ AS BUILT

FOR UNIT

SITE SERVICE

NOTES: INFORMATION BELOW TO BE COMPLETED: ○ BY PURCHASER ☐ BY MANUFACTURER ◎ BY MANUFACTURER OR PURCHASER

○ **DATA SHEETS**

	ITEM NO.	ATTACHED	ITEM NO.	ATTACHED	ITEM NO.	ATTACHED
PUMP		○		○		○
MOTOR		○		○		○
GEAR		○		○		○
TURBINE		○		○		○

APPLICABLE OVERLAY STANDARD(S):

REVISIONS

NO.	DATE	BY
1		
2		
3		
4		
5		

○ **OPERATING CONDITIONS (5.1.3)**

FLOW, NORMAL (GPM) RATED (GPM)

OTHER

SUCTION PRESSURE MAX./RATED / (PSIG)

DISCHARGE PRESSURE (PSIG)

DIFFERENTIAL PRESSURE (PSI)

DIFF. HEAD (FT) NPSHA (FT)

PROCESS VARIATIONS (5.1.4)

STARTING CONDITIONS (5.1.4)

SERVICE: ○ CONT. ○ INTERMITTENT (STARTS/DAY)

○ PARALLEL OPERATION REQ'D (5.1.13)

○ **SITE DATA (5.1.3)**

LOCATION: (5.1.30)

○ INDOOR ○ HEATED ○ OUTDOOR ○ UNHEATED

○ ELECTRICAL AREA CLASSIFICATION (5.1.24 / 6.1.4)

CL GR DIV

○ WINTERIZATION REQ'D ○ TROPICALIZATION REQ'D.

SITE DATA (5.1.30)

○ ALTITUDE (FT) BAROMETER (PSIA)

○ RANGE OF AMBIENT TEMPS: MIN./MAX. / (°F)

○ RELATIVE HUMIDITY: MIN./MAX. / (%)

UNUSUAL CONDITIONS: (5.1.30) ○ DUST ○ FUMES

○ OTHER

○ **DRIVER TYPE**

○ INDUCTION MOTOR ○ STEAM TURBINE ○ GEAR

○ OTHER

○ **MOTOR DRIVER (6.1.1 / 6.1.4)**

◎ MANUFACTURER

☐ (HP) ☐ (RPM)

☐ FRAME ◎ ENCLOSURE

◎ HORIZONTAL ◎ VERTICAL ◎ SERVICE FACTOR

◎ VOLTS/PHASE/HERTZ / /

○ TYPE

○ MINIMUM STARTING VOLTAGE (6.1.5)

◎ INSULATION ○ TEMP. RISE

◎ FULL LOAD AMPS

◎ LOCKED ROTOR AMPS

◎ STARTING METHOD

◎ LUBE

BEARINGS (TYPE/NUMBER):

☐ RADIAL /

☐ THRUST /

☐ VERTICAL THRUST CAPACITY

UP (LBS) DOWN (LBS)

○ **LIQUID (5.1.3)**

LIQUID TYPE OR NAME

○ HAZARDOUS ○ FLAMMABLE ○ (5.1.5)

	MIN.	NORMAL	MAX.
PUMPING TEMP (°F)			
VAPOR PRESS. (PSIA)			
RELATIVE DENSITY (SG):			
VISCOSITY (cP)			

SPECIFIC HEAT, Cp (BTU/LB °F)

○ CHLORIDE CONCENTRATION (6.5.2.4) (PPM)

○ H_2S CONCENTRATION (PPM) WET (5.12.1.12c)

CORROSIVE / EROSIVE AGENT (5.12.1.9)

MATERIALS (5.12.1.1)

○ ANNEX H CLASS (5.12.1.1)

○ MIN DESIGN METAL TEMP (5.12.4.1) (°F)

○ REDUCED-HARDNESS MATERIALS REQ'D. (5.12.1.12)

☐ BARREL/CASE IMPELLER

☐ CASE/IMPELLER WEAR RINGS

☐ SHAFT

☐ DIFFUSERS

◎ **PERFORMANCE:**

PROPOSAL CURVE NO. ☐ RPM

☐ IMPELLER DIA. RATED MAX. MIN. (IN.)

☐ IMPELLER TYPE

☐ RATED POWER (BHP) EFFICIENCY (%)

☐ MINIMUM CONTINUOUS FLOW:

THERMAL (GPM) STABLE (GPM)

☐ PREFERRED OPER. REGION TO (GPM)

☐ ALLOWABLE OPER. REGION TO (GPM)

☐ MAX. HEAD @ RATED IMPELLER (FT)

☐ MAX. POWER @ RATED IMPELLER (BHP)

☐ NPSHR AT RATED FLOW (FT) (5.1.10)

○ MAX. SUCTION SPECIFIC SPEED: (5.1.11)

○ MAX. SOUND PRESS. LEVEL REQ'D. (dBA) (5.1.16)

◎ EST. MAX. SOUND PRESS. LEVEL (dBA) (5.1.16)

◎ EST. MAX. SOUND POWER LEVEL (dBA) (5.1.16)

○ **UTILITY CONDITIONS (5.1.3)**

ELECTRICITY	VOLTAGE	PHASE	HERTZ
DRIVERS			
HEATING			

SYSTEM VOLTAGE DIP ○ 80% ○ OTHER (6.1.5)

STEAM	MAX. PRESS.	MAX. TEMP.	MIN. PRESS.	MIN. TEMP.
DRIVERS				
HEATING				

COOLING WATER: (5.1.19) SOURCE

SUPPLY TEMP. (°F) MAX. RETURN TEMP. (°F)

NORM. PRESS. (PSIG) DESIGN PRESS. (PSIG)

MIN. RET. PRESS. (PSIG) MAX. ALLOW. D.P. (PSI)

CHLORIDE CONCENTRATION: (PPM)

Figure N.2 — Data sheets, USC units

Copyright American Petroleum Institute
Reproduced by IHS under license with API

Document provided by IHS Licensee=TECNA/5935100001, 11/02/2004 06:04:35 MST
Questions or comments about this message: please call the Document Policy Group

PAGE 2 OF ___

REMARKS

Figure N.2 (*continued*)

Copyright American Petroleum Institute
Reproduced by IHS under license with API
Document provided by IHS Licensee=TECNA/5935100001, 11/02/2004 06:04:35 MST
Questions or comments about this message: please call the Document Policy Group

Centrifugal pump data sheet — Single-stage overhung (type OH) — US customary units

PAGE 3 OF

JOB NO. ITEM NO.(S)

REQ. / SPEC NO. /

PURCH. ORDER NO. DATE

ENQUIRY NO. BY

CONSTRUCTION

ROTATION: (VIEWED FROM COUPLING END) ☐ CW ☐ CCW

PUMP TYPE: (4.1)

☐ OH2 ☐ OH3 ☐ OH6 ☐ OTHER

CASING MOUNTING:

☐ CENTRELINE ☐ IN-LINE ☐ OTHER

CASING TYPE:

☐ SINGLE VOLUTE ☐ MULTIPLE VOLUTE ☐ DIFFUSER

CASE PRESSURE RATING:

○ OH6 PUMP SUCTION REGION DESIGNED FOR MAWP (5.3.6)

☐ MAX ALLOWABLE WORKING PRESSURE (PSIG)

@ (°F)

☐ HYDROTEST PRESSURE (PSIG)

☐ **NOZZLE CONNECTIONS: (5.4.2)**

	SIZE (IN)	FLANGE RATING (LBS)	FACING	POSITION
SUCTION				
DISCHARGE				

PRESSURE CASING AUX. CONNECTIONS: (5.4.3)

	NO.	SIZE (NPS)	TYPE
☐ DRAIN			
☐ VENT			
☐ WARM-UP			

☐ MACHINED AND STUDDED CONNECTIONS (5.4.3.8)

○ CYLINDRICAL THREADS REQUIRED (5.4.3.3)

ROTOR:

○ COMPONENT BALANCE TO ISO 1940 G1.0 (5.9.4.4)

COUPLINGS: (6.2.2)

○ MANUFACTURER ☐ MODEL

☐ RATING (HP/100 r/min)

☐ SPACER LENGTH (IN) ☐ SERVICE FACT

○ COUPLING BALANCED TO ISO 1940-1 G6.3 (6.2.3)

○ COUPLING WITH PROPRIETARY CLAMPING DEVICE (6.2.11)

○ COUPLING PER ISO 14691 (6.2.4)

○ COUPLING PER ISO 10441 (6.2.4)

○ COUPLING PER API 671 (6.2.4) ○ ASME B15.1

○ NON-SPARK COUPLING GUARD (6.2.14c)

○ COUPLING GUARD STANDARD PER (6.2.14a)

BASEPLATES:

☐ API BASEPLATE NUMBER (ANNEX D)

○ NON-GROUT CONSTRUCTION (6.3.13)

○ OTHER

MECHANICAL SEAL: (5.8.1)

○ SEE ATTACHED ISO 21049/API 682 DATA SHEET

SURFACE PREPARATION AND PAINT

○ MANUFACTURER'S STANDARD ○ OTHER (SEE BELOW)

○ SPECIFICATION NO.

PUMP:

○ PRIMER

○ FINISH COAT

BASEPLATE: (6.3.17)

○ PRIMER

○ FINISH COAT

○ DETAILS OF LIFTING DEVICES(6.3.20)

SHIPMENT: (7.4.1)

○ DOMESTIC ○ EXPORT ○ EXPORT BOXING REQUIRED

○ OUTDOOR STORAGE MORE THAN 6 MONTHS

SPARE ROTOR ASSEMBLY PACKAGED FOR:

○ HORIZONTAL STORAGE ○ VERTICAL STORAGE

○ TYPE OF SHIPPING PREPARATION

HEATING AND COOLING

○ HEATING JACKET REQ'D. (5.8.9)

☐ COOLING REQ'D.

☐ COOLING WATER (C.W.) PIPING PLAN (6.5.3.1)

C.W. PIPING:

☐ PIPE ☐ TUBING FITTINGS

C.W. PIPING MATERIALS:

☐ S. STEEL ☐ C. STEEL ☐ GALVANIZED

COOLING WATER REQUIREMENTS:

☐ BEARING HOUSING (GPM)

HEAT EXCHANGER (GPM)

TOTAL COOLING WATER (GPM)

HEAT MEDIUM: ○ STEAM ○ OTHER

HEATING PIPING: ○ TUBING ○ PIPE

BEARINGS AND LUBRICATION

BEARING (TYPE/NUMBER) (5.10.1):

☐ RADIAL /

☐ THRUST /

LUBRICATION (5.11.3, 5.11.4):

☐ GREASE ☐ OIL

○ PURGE OIL MIST ○ PURE OIL MIST

○ CONSTANT LEVEL OILER PREFERENCE (5.10.2.2):

☐ OIL VISC. ISO GRADE

INSTRUMENTATION

○ ACCELEROMETER (6.4.2.1)

○ PROVISION FOR MOUNTING ONLY (5.10.2.11)

○ FLAT SURFACE REQ'D (5.10.2.12)

○ TEMP. GAUGES (WITH THERMOWELLS) (8.1.3.6)

○ PRESSURE GAUGE TYPE

REMARKS:

WEIGHTS (LBS)

PUMP

BASEPLATE

DRIVER

TOTAL

Figure N.2 (*continued*)

Copyright American Petroleum Institute
Reproduced by IHS under license with API

Document provided by IHS Licensee=TECNA/5935100001, 11/02/2004 06:04:35 MST
Questions or comments about this message: please call the Document Policy Group

PAGE 4 OF ___

SPARE PARTS (TABLE 18)

○ START-UP ○ NORMAL MAINTENANCE

OTHER PURCHASER REQUIREMENTS

○ COORDINATION MEETING REQUIRED (9.1.3)
○ MAXIMUM DISCHARGE PRESSURE TO INCLUDE (5.3.2)
  ○ MAX RELATIVE DENSITY
  ○ MAX DIA. IMPELLERS AND/OR NO. OF STAGES
  ○ OPERATION TO TRIP SPEED
○ OH3 BEARING HS6 LIFTER (8.1.2.6)
○ CONNECTION DESIGN APPROVAL (5.12.3.4)
○ TORSIONAL ANALYSIS REQUIRED (5.9.2.1)
○ TORSIONAL ANALYSIS REPORT (5.9.2.6)
○ PROGRESS REPORTS (9.3.3)
○ OUTLINE OF PROCEDURES FOR OPTIONAL TESTS (9.2.5)
○ ADDITIONAL DATA REQUIRING 20 YEARS RETENTION (7.2.1.1f)

PIPING AND APPURTENANCES

MANIFOLD PIPING TO SINGLE CONNECTION (6.5.1.6)
  ○ VENT ○ DRAIN ○ COOLING WATER
○ MOUNT SEAL RESERVOIR OFF BASEPLATE (6.5.1.4)
○ FLANGES REQ'D IN PLACE OF SOCKET WELD UNIONS (6.5.2.8)
○ INSTALLATION LIST IN PROPOSAL (9.2.3L)
CONNECTION BOLTING
  ○ PTFE COATING ○ ASTM A153 GALVANIZED
  ○ PAINTED ○ SS

QA INSPECTION AND TESTING

○ SHOP INSPECTION (7.1.4)
○ PERFORMANCE CURVE APPR.
○ TEST WITH SUBSTITUTE SEAL (7.3.3.2b)
○ MATERIAL CERTIFICATION REQUIRED (5.12.1.8)
  ○ CASING ○ IMPELLER ○ SHAFT
  ○ OTHER _____
○ CASTING REPAIR PROCEDURE APPROVAL REQ'D (5.12.2.5)
○ INSPECTION REQUIRED FOR CONNECTION WELDS (5.12.3.4e)
  ○ MAG. PARTICLE ○ LIQUID PENETRANT
  ○ RADIOGRAPHIC ○ ULTRASONIC
○ INSPECTION REQUIRED FOR CASTINGS (7.2.1.3 / 5.12.1.5)
  ○ MAG. PARTICLE ○ LIQUID PENETRANT
  ○ RADIOGRAPHIC ○ ULTRASONIC
○ HARDNESS TEST REQUIRED: _____ (7.2.2.3)
○ ADDITIONAL SUBSURFACE EXAMINATION FOR 7.2.1.3
  FOR _____
  METHOD _____

QA INSPECTION AND TESTING (CONT.)

TEST	NON-WIT	WIT	OBSERVE
○ HYDROSTATIC (7.3.2)	○	○	○
○ PERFORMANCE (7.3.3)	○	○	○
○ RETEST ON SEAL LEAKAGE (7.3.3.2d)	○	○	○
○ NPSH (7.3.4.2)	○	○	○
○ TRUE PEAK VELOCITY DATA (7.3.3.4d)	○	○	○
○ COMPLETE UNIT TEST (7.3.4.3)	○	○	○
○ SOUND LEVEL TEST (7.3.4.4)	○	○	○
○ CLEANLINESS PRIOR TO FINAL ASSEMBLY (7.2.2.2)	○	○	○
○ NOZZLE LOAD TEST (6.3.6)	○	○	○
○ CHECK FOR CO-PLANAR MOUNTING PAD SURFACES (6.3.3)	○	○	○
○ MECHANICAL RUN UNTIL OIL TEMP. STABLE (7.3.4.7.1)	○	○	○
○ 4 h MECHANICAL RUN AFTER OIL TEMP. STABLE (7.3.4.7.3)	○	○	○
○ 4 h MECH. RUN TEST(7.3.4.7.2)	○	○	○
○ BRG HSG RESONANCE TEST (7.3.4.6)	○	○	○
○ AUXILIARY EQUIPMENT TEST (7.3.4.5)	○	○	○
○ IMPACT TESTING (5.12.4.3)	○	○	○
○ PER EN 13445			
○ PER ASME VIII			
○ _____	○	○	○

○ VENDOR KEEP REPAIR AND HT RECORDS (7.2.1.1c)
○ VENDOR SUBMIT TEST PROCEDURES (7.3.1.2 / 9.2.5)
○ VENDOR SUBMIT TEST DATA WITHIN 24 h (7.3.3.3e)
○ INCLUDE PLOTTED VIBRATION SPECTRA (5.9.3.3)
○ SUBMIT INSPECTION CHECK LIST (7.1.6)

REMARKS

Figure N.2 (*continued*)

Copyright American Petroleum Institute
Reproduced by IHS under license with API
Document provided by IHS Licensee=TECNA/5935100001, 11/02/2004 06:04:35 MST
Questions or comments about this message: please call the Document Policy Group

Centrifugal pump data sheet — Between-bearings (type BB) — US customary units

PAGE 3 OF

JOB NO. ITEM NO.(S)

REQ. / SPEC NO. /

PURCH. ORDER NO. DATE

ENQUIRY NO. BY

CONSTRUCTION

ROTATION: (VIEWED FROM COUPLING END) ☐ CW ☐ CCW

PUMP TYPE: (4.1)

☐ BB1 ☐ BB2 ☐ BB3 ☐ BB5

CASING MOUNTING:

☐ CENTERLINE ☐ NEAR CENTERLINE

☐ FOOT

CASING SPLIT:

☐ AXIAL ☐ RADIAL

CASING TYPE:

☐ SINGLE VOLUTE ☐ MULTIPLE VOLUTE ☐ DIFFUSER

☐ BETWEEN BEARINGS ☐ BARREL

CASE PRESSURE RATING:

☐ MAX. ALLOWABLE WORKING PRESSURE (PSIG)

@ (°F)

☐ HYDROTEST PRESSURE (PSIG)

○ SUCTION PRESS. REGIONS MUST BE DESIGNED FOR MAWP ((5.3.6)

☐ **NOZZLE CONNECTIONS: (5.4.2)**

	SIZE (NPS)	FLANGE RATING	FACING	POSITION
SUCTION				
DISCHARGE				
BALANCE DRUM				

PRESSURE CASING AUX. CONNECTIONS: (5.4.3)

	NO.	SIZE (NPS)	TYPE
☐ DRAIN			
☐ VENT			
☐ PRESS. GAUGE			
☐ TEMP. GAUGE			
☐ WARM-UP			
☐ BALANCE/LEAK-OFF			

☐ MACHINED AND STUDDED CONNECTIONS (5.4.3.8)

○ CYLINDRICAL THREADS REQUIRED (5.4.3.3)

ROTOR:

○ COMPONENT BALANCE TO ISO 1940 G1.0 (5.9.4.4)

○ SHRINK FIT -LIMITED MOVEMENT IMPELLERS (8.2.2.3)

COUPLINGS: (6.2.2)

○ MANUFACTURER ☐ MODEL

☐ RATING (HP/100 r/min)

☐ SPACER LENGTH (IN) ☐ SERVICE FACTOR

DRIVER HALF-COUPLING MOUNTED BY:

○ PUMP MFR. ○ DRIVER MFR. ○ PURCHASER

○ COUPLING WITH HYDRAULIC FIT (6.2.10)

○ COUPLING BALANCED TO ISO 1940-1 G6.3 (6.2.3)

○ COUPLING PER ISO 14691 (6.2.4)

○ COUPLING PER ISO 10441 (6.2.4)

○ COUPLING PER API 671 (6.2.4)

○ NON-SPARK COUPLING GUARD (6.2.14c)

○ COUPLING GUARD STANDARD PER (6.2.14a)

BASEPLATES:

☐ API BASEPLATE NUMBER (ANNEX D)

○ NON-GROUT CONSTRUCTION (6.3.13)

○ OTHER

MECHANICAL SEAL: (5.8.1)

○ SEE ATTACHED ISO 21049/API 682 DATA SHEET

SURFACE PREPARATION AND PAINT

○ MANUFACTURER'S STANDARD ○ OTHER (SEE BELOW)

○ SPECIFICATION NO.

PUMP:

○ PUMP SURFACE PREPARATION

○ PRIMER

○ FINISH COAT

BASEPLATE: (6.3.17)

○ BASEPLATE SURFACE PREPARATION

○ PRIMER

○ FINISH COAT

○ DETAILS OF LIFTING DEVICES(6.3.20)

SHIPMENT: (7.4.1)

○ DOMESTIC ○ EXPORT ○ EXPORT BOXING REQUIRED

○ OUTDOOR STORAGE MORE THAN 6 MONTHS

SPARE ROTOR ASSEMBLY PACKAGED FOR:

○ SHIPPING CONTAINER (8.2.8.3) ○ VERTICAL STORAGE (8.2.8.2)

○ TYPE OF SHIPPING PREPARATION ○ N_2 PURGE (8.2.8.4)

HEATING AND COOLING

○ HEATING JACKET REQ'D. (5.8.9) ☐ COOLING REQ'D.

☐ COOLING WATER PIPING PLAN (6.5.3.1)

C.W. PIPING:

☐ PIPE ☐ TUBING; FITTINGS

C.W. PIPING MATERIALS:

☐ S. STEEL ☐ C. STEEL ☐ GALVANIZED

COOLING WATER REQUIREMENTS:

☐ BEARING HOUSING (GPM) @ (PSIG)

☐ HEAT EXCHANGER (GPM) @ (PSIG)

STEAM PIPING: ○ TUBING ○ PIPE

BEARINGS AND LUBRICATION

BEARING (TYPE/NUMBER) (5.10.1):

☐ RADIAL /

☐ THRUST /

LUBRICATION (5.11.3, 5.11.4):

☐ RING OIL ☐ HYDRODYNAMIC ○ PURGE OIL MIST ○ PURE OIL MIST

○ CONSTANT LEVEL OILER PREFERENCE (5.10.2.2):

○ PRESSURE LUBE SYS. ISO 10438-3 ○ ISO 10438-2 (8.2.6.1/8.2.6.5)

☐ OIL VISC. ISO GRADE

○ OIL PRESS. TO BE GREATER THAN COOLANT PRESSURE

○ REVIEW AND APPROVE THRUST BEARING SIZE [8.2.5.2 d)]

☐ OIL HEATER REQUIRED: ○ STEAM ○ ELECTRIC

INSTRUMENTATION (6.4.2)

○ SEE ATTACHED API 670 DATA SHEET

○ ACCELEROMETER(S) (6.4.2.1)

○ PROVISION FOR VIBRATION PROBES (6.4.2.2)

○ RADIAL PER BRG. ○ AXIAL PER BRG.

○ PROVISION FOR MOUNTING ONLY (5.10.2.11)

○ FLAT SURFACE REQ'D (5.10.2.12)

○ RADIAL BEARING METAL TEMP. ○ THRUST BRG METAL TEMP.

○ TEMP. GAUGES (WITH THERMOWELLS)

○ MONITORS AND CABLES SUPPLIED BY (6.4.2.4)

REMARKS

WEIGHTS (LBS)

PUMP		BASEPLATE	
DRIVER		TOTAL	
GEAR			

Figure N.2 (*continued*)

Copyright American Petroleum Institute
Reproduced by IHS under license with API

Document provided by IHS Licensee=TECNA/5935100001, 11/02/2004 06:04:35 MST
Questions or comments about this message: please call the Document Policy Group

PAGE 4 OF ___

SPARE PARTS (TABLE 18)

○ START-UP ○ NORMAL MAINTENANCE

○ SPECIFY _____

OTHER PURCHASER REQUIREMENTS

○ COORDINATION MEETING REQUIRED (9.1.3)

○ MAXIMUM DISCHARGE PRESSURE TO INCLUDE (5.3.2)

○ MAX RELATIVE DENSITY

○ MAX DIA. IMPELLERS AND/OR NO OF STAGES

○ OPERATION TO TRIP SPEED

○ CONNECTION DESIGN APPROVAL (5.12.3.4/8.2.1.4)

○ INERT GAS INHIBITED STORAGE - SPARE CARTRIDGE (8.2.8.4)

○ TORSIONAL ANALYSIS REQUIRED (5.9.2.1)

○ TORSIONAL ANALYSIS REPORT (5.9.2.6)

○ PROGRESS REPORTS (9.3.3)

○ OUTLINE OF PROCEDURES FOR OPTIONAL TESTS (9.2.5)

○ ADDITIONAL DATA REQUIRING 20 YEARS RETENTION (7.2.2.1f)

◯ LATERAL ANALYSIS REQUIRED (8.2.4.1 / 8.2.4.1.3)

◯ DYNAMIC BALANCE ROTOR (8.2.4.2)

MANIFOLD PIPING TO SINGLE CONNECTION (6.5.1.6)

◯ VENT ◯ DRAIN ◯ COOLING WATER

◯ MOUNT SEAL RESERVOIR OFF BASEPLATE (6.5.1.4)

◯ FLANGES REQUIRED IN PLACE OF SOCKET WELD UNIONS (6.5.2.8)

CONNECTION BOLTING

○ PTFE COATING ○ ASTM A153 GALVANIZED

○ PAINTED ○ SS

◯ INSTALLATION LIST IN PROPOSAL (9.2.3L)

QA INSPECTION AND TESTING

○ SHOP INSPECTION (7.1.4)

○ PERFORMANCE CURVE APPR.

◯ TEST WITH SUBSTITUTE SEAL (7.3.3.2b)

○ MATERIAL CERTIFICATION REQUIRED (5.12.1.8)

○ CASING ○ IMPELLER ○ SHAFT

○ OTHER _____

○ CASTING REPAIR PROCEDURE APPROVAL REQ'D (5.12.2.5)

◯ INSPECTION REQUIRED FOR CONNECTION WELDS (5.12.3.4e)

◯ MAG. PARTICLE ◯ LIQUID PENETRANT

◯ RADIOGRAPHIC ◯ ULTRASONIC

◯ INSPECTION REQUIRED FOR CASTINGS (7.2.1.3)(5.12.1.5)

◯ MAG. PARTICLE ◯ LIQUID PENETRANT

◯ RADIOGRAPHIC ◯ ULTRASONIC

○ HARDNESS TEST REQUIRED: _____(7.2.2.3)

○ ADDITIONAL SURFACE / SUBSURFACE EXAMINATION (7.2.1.3)

FOR _____

METHOD _____

QA INSPECTION AND TESTING (CONT.)

TEST	NON-WIT	WIT	OBSERVE
○ HYDROSTATIC (7.3.2)	○	○	○
○ PERFORMANCE (7.3.3)	○	○	○
○ NPSH (7.3.4.2)	○	○	○
○ RETEST ON SEAL LKGE (7.3.3.2d)	○	○	○
○ RETEST REQUIRED AFTER FINAL HEAD ADJUSTMENT (7.3.3.5b)	○	○	○
○ COMPLETE UNIT TEST (7.3.4.3)	○	○	○
○ SOUND LEVEL TEST (7.3.4.4)	○	○	○
○ CLEANLINESS PRIOR TO FINAL ASSEMBLY (7.2.2.2)	○	○	○
○ NOZZLE LOAD TEST (6.3.6)	○	○	○
○ CHECK FOR CO-PLANAR MOUNTING PAD SURFACES (6.3.3)	○	○	○
○ MECHANICAL RUN UNTIL OIL TEMP. STABLE (7.3.4.7.1)	○	○	○
○ 4 h MECHANICAL RUN AFTER OIL TEMP. STABLE (7.3.4.7.3)	○	○	○
○ 4 h MECH. RUN TEST(7.3.4.7.2)	○	○	○
○ TRUE PEAK VELOCITY DATA (7.3.3.4d)	○	○	○
○ BRG HSG RESONANCE TEST (7.3.4.6)	○	○	○
○ REMOVE / INSPECT HYDRODYNAMIC BEARINGS AFTER TEST (8.2.7.5)	○	○	○
○ AUXILIARY EQUIPMENT TEST (7.3.4.5)	○	○	○
◯ IMPACT TESTING (5.12.4.3)	○	○	○
○ PER EN 13445			
○ PER ASME VIII			
○ _____	○	○	○

○ VENDOR KEEP REPAIR AND HT RECORDS (7.2.1.1c)

○ VENDOR SUBMIT TEST PROCEDURES (7.3.1.2 / 9.2.5)

○ VENDOR SUBMIT TEST DATA WITHIN 24 h (7.3.3.3e)

○ INCLUDE PLOTTED VIBRATION SPECTRA (5.9.3.3)

○ RECORD FINAL ASSEMBLY RUNNING CLEARANCES

○ SUBMIT INSPECTION CHECK LIST (7.1.6)

REMARKS

Figure N.2 (*continued*)

Copyright American Petroleum Institute
Reproduced by IHS under license with API

Document provided by IHS Licensee=TECNA/5935100001, 11/02/2004 06:04:35 MST
Questions or comments about this message: please call the Document Policy Group

Centrifugal pump data sheet — Vertically suspended (type VS) — US customary units

PAGE 3 OF

JOB NO. ITEM NO.(S)

REQ. / SPEC NO. /

PURCH. ORDER NO. DATE

ENQUIRY NO. BY

CONSTRUCTION

ROTATION: (VIEWED FROM CPLG END) ☐ CW ☐ CCW

PUMP TYPE: (1.3)

☐ VS1 ☐ VS2 ☐ VS3 ☐ VS4 ☐ VS5 ☐ VS6 ☐ VS7

CASING MOUNTING:

☐ INLINE

☐ SUMP COVER PLATE

☐ SEPARATE MOUNTING PLATE (8.3.8.3.1)

☐ SEPARATE SOLE PLATE (8.3.8.3.3)

CASING SPLIT:

☐ AXIAL ☐ RADIAL

CASING TYPE:

☐ SINGLE VOLUTE ☐ MULTIPLE VOLUTE ☐ DIFFUSER

CASE PRESSURE RATING:

☐ MAX ALLOWABLE WORKING PRESSURE (PSIG)

☐ @ (°F)

☐ HYDROTEST PRESSURE (PSIG)

○ SUCTION PRESS. REGIONS MUST BE DESIGNED FOR MAWP (5.3.6)

☐ **NOZZLE CONNECTIONS: (5.4.2)**

	SIZE (IN)	FLANGE RATING (LBS)	FACING	POSITION
SUCTION				
DISCHARGE				
BALANCE DRUM				

PRESSURE CASING AUX. CONNECTIONS: (5.4.3)

	NO.	SIZE (NPS)	TYPE
☐ DRAIN			
☐ VENT			
☐ WARM-UP			
☐ BALANCE / LEAK-OFF			

☐ MACHINED AND STUDDED CONNECTIONS (5.4.3.8)

○ CYLINDRICAL THREADS REQUIRED (5.4.3.3)

ROTOR:

○ COMPONENT BALANCE TO ISO 1940 G1.0 (5.9.4.4)

○ SHRINK FIT -LIMITED MOVEMENT IMPELLERS (8.2.2.3)

COUPLINGS:

○ MANUFACTURER ☐ MODEL

☐ RATING (HP/100 r/min)

☐ SPACER LENGTH (IN) ☐ SERVICE FACTOR

☐ RIGID

THROUGH COUPLINGS:

○ MANUFACTURER ☐ MODEL

☐ RATING (HP/100 r/min) ○ LUBE

☐ SPACER LENGTH (IN) ☐ SERVICE FACTOR

☐ RIGID

DRIVER HALF-COUPLING MOUNTED BY:

○ PUMP MFR. ○ DRIVER MFR. ○ PURCHASER

○ COUPLING BALANCED TO ISO 1940-1 G.6.3 (6.2.3)

○ COUPLING PER ISO 14691 (6.2.4)

○ COUPLING PER ISO 10441 (6.2.4)

○ COUPLING PER API 671 (6.2.4)

○ NON-SPARK COUPLING GUARD (6.2.14c)

○ COUPLING GUARD STANDARD PER (6.2.14a)

MECHANICAL SEAL:

○ SEE ATTACHED ISO 21049/API 682 DATA SHEET

SURFACE PREPARATION AND PAINT

☐ MANUFACTURER'S STANDARD ○ OTHER (SEE BELOW)

PUMP:

○ PUMP SURFACE PREPARATION

☐ PRIMER

○ FINISH COAT

BASEPLATE / COLUMN: (6.3.17)

○ BASEPLATE SURFACE PREPARATION

○ PRIMER

○ FINISH COAT

SHIPMENT: (7.4.1)

○ DOMESTIC ○ EXPORT ○ EXPORT BOXING REQUIRED

○ OUTDOOR STORAGE MORE THAN 6 MONTHS

SPARE ROTOR ASSEMBLY PACKAGED FOR:

○ HORIZONTAL STORAGE ○ VERTICAL STORAGE

○ TYPE OF SHIPPING PREPARATION

HEATING AND COOLING

○ HEATING JACKET REQ'D. (5.8.9) ☐ COOLING REQ'D.

☐ COOLING WATER PIPING PLAN (6.5.3.1)

C.W. PIPING:

☐ PIPE ☐ TUBING; FITTINGS

C.W. PIPING MATERIALS:

☐ S. STEEL ☐ C. STEEL ☐ GALVANIZED

COOLING WATER REQUIREMENTS:

☐ BEARING HOUSING (GPM) @ (PSIG)

☐ HEAT EXCHANGER (GPM) @ (PSIG)

STEAM PIPING: ○ TUBING ○ PIPE

BEARINGS AND LUBRICATION

BEARING (TYPE/NUMBER):

☐ RADIAL /

☐ THRUST /

LUBRICATION (5.11.3, 5.11.4):

☐ GREASE ☐ FLOOD ○ PURGE OIL MIST

☐ FLINGER ○ PURE OIL MIST

○ CONSTANT LEVEL OILER PREFERENCE (5.10.2.2):

☐ OIL VISC. ISO GRADE

○ REVIEW AND APPROVE THRUST BEARING SIZE

☐ OIL HEATER REQUIRED: ○ STEAM ○ ELECTRIC

INSTRUMENTATION (6.4.2)

○ ACCELEROMETER (6.4.2.1)

○ PROVISION FOR MOUNTING ONLY (5.10.2.11)

○ FLAT SURFACE REQ'D (5.10.2.12)

○ PRESSURE GAUGE TYPE

REMARKS:

WEIGHTS (LBS)

PUMP

DRIVER

GEAR

BASEPLATE

TOTAL

Figure N.2 (continued)

Copyright American Petroleum Institute
Reproduced by IHS under license with API

Document provided by IHS Licensee=TECNA/5935100001, 11/02/2004 06:04:35 MST
Questions or comments about this message: please call the Document Policy Group

PAGE 4 OF ___

SPARE PARTS (TABLE 18)

○ START-UP ○ NORMAL MAINTENANCE
○ SPECIFY _____

OTHER PURCHASER REQUIREMENTS

○ COORDINATION MEETING REQUIRED (9.1.3)
○ MAXIMUM DISCHARGE PRESSURE TO INCLUDE (5.3.2)
○ MAX. RELATIVE DENSITY
○ MAX. DIA. IMPELLERS AND/OR NO OF STAGES
○ OPERATION TO TRIP SPEED
○ CONNECTION DESIGN APPROVAL (5.12.3.4)
○ TORSIONAL ANALYSIS REQUIRED (5.9.2.1)
○ TORSIONAL ANALYSIS REPORT (5.9.2.6)
○ PROGRESS REPORTS (9.3.3)
○ OUTLINE OF PROCEDURES FOR OPTIONAL TESTS (9.2.5)
○ ADDITIONAL DATA REQUIRING 20 YEARS RETENTION (7.2.2.1f)
MANIFOLD PIPING TO SINGLE CONNECTION (6.5.1.6)
◯ VENT ◯ VENT ◯ COOLING WATER
◯ MOUNT SEAL RESERVOIR OFF BASEPLATE (6.5.1.4)
◯ FLANGES REQUIRED IN PLACE OF SOCKET WELD UNIONS (6.5.2.8)
CONNECTION BOLTING ○ PTFE COATING ○ SS
○ PAINTED ○ ASTM A153 GALVANIZED
◯ INSTALLATION LIST IN PROPOSAL (9.2.3L)

○ **VERTICAL PUMPS**

☐ PUMP THRUST: (+) UP (-) DOWN
AT MIN. FLOW _____ (LBS) _____ (LBS)
AT RATED FLOW _____ (LBS) _____ (LBS)
MAX. THRUST _____ (LBS) _____ (LBS)
◯ SOLEPLATE REQ'D. (8.3.8.3.3) _____ (IN) X _____ (IN)
○ SEPARATE MOUNTING PLATE REQUIRED (8.3.8.3.1)

☐ SOLEPLATE THICKNESS _____ (IN)
COLUMN PIPE: ☐ FLANGED ☐ THREADED
DIAMETER _____ (IN) LENGTH _____ (FT)
GUIDE BUSHINGS
☐ NUMBER _____
☐ LINE SHAFT BEARING SPACING _____ (IN)
GUIDE BUSHINGS LUBE:
☐ WATER ☐ OIL
☐ GREASE ☐ PUMPAGE
LINESHAFT: ◯ OPEN ◯ ENCLOSED
☐ LINE SHAFT DIAMETER: _____ (IN)
☐ TUBE DIAMETER: _____ (IN)
LINESHAFT COUPLING:
☐ LINE SHAFT DIAMETER: ☐ SLEEVE & KEY ☐ THREADED
☐ SUCTION CAN THICKNESS _____ (IN)
☐ LENGTH _____ (FT)
☐ DIAMETER _____ (FT)
○ SUCTION STRAINER TYPE _____
○ FLOAT & ROD ○ FLOAT SWITCH
○ IMPELLER COLLETS ACCEPTABLE (5.6.3)
○ HARDENED SLEEVES UNDER BEARINGS (8.3.10.5)

VERTICAL PUMPS (CONT.)

○ PUMP AND STRUCTURE DYNAMIC ANALYSIS (8.3.5)
○ DRAIN PIPED TO SURFACE (8.3.13.5)

QA INSPECTION AND TESTING

○ SHOP INSPECTION (7.1.4) ○ PERF. CURVE APPROVAL
◯ TEST WITH SUBSTITUTE SEAL (7.3.3.2b)

TEST	NON-WIT	WIT	OBSERVE
○ HYDROSTATIC TEST OF BOWLS AND COLUMN (8.3.13.2)	○	○	○
○ HYDROSTATIC (7.3.2)	○	○	○
○ PERFORMANCE (7.3.3)	○	○	○
○ RETEST ON SEAL LKGE (7.3.3.2d)	○	○	○
○ NPSH (7.3.4.2)	○	○	○
○ COMPLETE UNIT TEST (7.3.4.3)	○	○	○
○ SOUND LEVEL TEST (7.3.4.4)	○	○	○
○ CLEANLINESS PRIOR TO FINAL ASSEMBLY (7.2.2.2)	○	○	○
○ NOZZLE LOAD TEST (6.3.6)	○	○	○
○ 4 h MECHANICAL RUN TEST(7.3.4.7.2)	○	○	○
○ MECHANICAL RUN UNTIL OIL TEMP. STABLE (7.3.4.7.1)	○	○	○
○ 4 h MECHANICAL RUN AFTER OIL TEMP. STABLE (7.3.4.7.3)	○	○	○
○ TRUE PEAK VELOCITY DATA (7.3.3.4.d)	○	○	○
○ RESONANCE TEST (8.3.9.2)	○	○	○
○ AUXILIARY EQUIPMENT TEST (7.3.4.5)	○	○	○
◯ IMPACT TESTING (5.12.4.3)	○	○	○

○ PER EN 13445
○ PER ASME VIII

○ VENDOR KEEP REPAIR AND HT RECORDS (7.2.1.1c)
○ VENDOR SUBMIT TEST PROCEDURES (7.3.1.2 / 9.2.5)
○ VENDOR SUBMIT TEST DATA WITHIN 24 h (7.3.3.3e)
○ INCLUDE PLOTTED VIBRATION SPECTRA (5.9.3.3)
○ RECORD FINAL ASSEMBLY RUNNING CLEARANCES
○ COMPLETION OF INSPECTION CHECK LIST (7.1.6)
○ MATERIAL CERTIFICATION REQUIRED (5.12.1.8)
○ CASING ○ IMPELLER ○ SHAFT
○ OTHER _____
○ CASTING REPAIR PROCEDURE APPROVAL REQ'D (5.12.2.5)
◯ INSPECTION REQUIRED FOR CONNECTION WELDS (5.12.3.4)
◯ MAG. PARTICLE ◯ LIQUID PENETRANT
◯ RADIOGRAPHIC ◯ ULTRASONIC
◯ INSPECTION REQUIRED FOR CASTINGS (7.2.1.3) (5.12.1.5)
◯ MAG. PARTICLE ◯ LIQUID PENETRANT
◯ RADIOGRAPHIC ◯ ULTRASONIC
○ HARDNESS TEST REQ'D. (7.2.2.3)
○ ADDITIONAL SUBSURFACE EXAMINATION (7.2.1.3)
FOR _____
METHOD _____

Sump arrangement

Key

1 grade
2 low liquid level
3 centreline of discharge
l_1 sump depth
l_2 pump length
l_3 centreline discharge height
l_4 height of grade above low liquid level
l_5 datum elevation, first-stage impeller
l_6 submergence required
Ød sump diameter

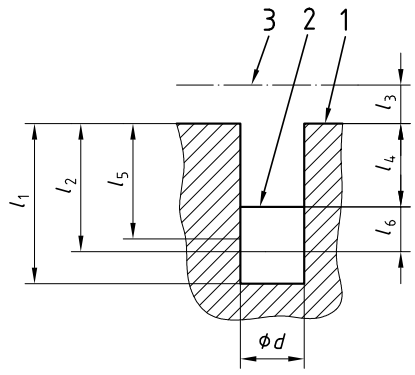

Refer to hydraulic institute standards for definitions

○ l_1 _____ FT ☐ l_2 _____ FT
○ Ød _____ FT ☐ l_6 _____ FT
○ l_4 _____ FT ☐ l_3 _____ FT
☐ l_5 _____ FT

Figure N.2 (*continued*)

Copyright American Petroleum Institute
Reproduced by IHS under license with API
Document provided by IHS Licensee=TECNA/5935100001, 11/02/2004 06:04:35 MST
Questions or comments about this message: please call the Document Policy Group

Centrifugal pump — References

PAGE 5 OF

JOB NO. ITEM NO.(S)

REQ. / SPEC. NO. /

PURCH. ORDER NO. DATE

ENQUIRY NO. BY

☐ **PRESSURE DESIGN CODES**
○ **WELDING REQUIREMENTS**
◯ **PURCHASER-DEFINED MATERIAL INSPECTIONS**

1 APPLICABLE TO: ○ PROPOSALS ○ PURCHASE ◯ AS BUILT

2 FOR UNIT

3 SITE SERVICE

4 NOTES: INFORMATION BELOW TO BE COMPLETED: ○ BY PURCHASER ☐ BY MANUFACTURER ◯ BY MANUFACTURER OR PURCHASER

5 **PRESSURE VESSEL DESIGN CODE REFERENCES.**

6 ☐ THESE REFERENCES MUST BE LISTED BY THE MANUFACTURER

7 CASTING FACTORS USED IN DESIGN (5.3.4) (TABLE 3) ☐

8 SOURCE OF MATERIAL PROPERTIES ☐

9

10 **WELDING AND REPAIRS (5.12.3)**

11 THESE REFERENCES MUST BE LISTED BY THE PURCHASER. (DEFAULT TO TABLE 10 IF NO PURCHASER PREFERENCE IS STATED)

12 ○ ALTERNATIVE WELDING CODES AND STANDARDS (5.12.3.1)

	Welding Requirement (Applicable Code or Standard)	**Purchaser-defined**	**Default per Table 10**
14	Welder/operator qualification	○	○
15	Welding procedure qualification	○	○
16	Non-pressure- retaining structural welding such as baseplates or supports	○	○
17	Magnetic particle or liquid penetrant examination of the plate edges	○	○
18	Postweld heat treatment	○	○
19	Postweld heat treatment of casing fabrication welds	○	○
20			

21 **MATERIAL INSPECTION (7.2.2.1) (7.2.1.3)**

22 THESE REFERENCES MUST BE LISTED BY THE PURCHASER (DEFAULT TO TABLE 13 IF NO PURCHASER PREFERENCE IS STATED)

23 ○ ALTERNATIVE MATERIAL INSPECTIONS AND ACCEPTANCE CRITERIA (SEE TABLE 13)

	Type of inspection	Methods	For fabrications	Castings
25	Radiography	○	○	○
26	Ultrasonic inspection	○	○	○
27	Magnetic particle inspection	○	○	○
28	Liquid penetrant inspection	○	○	○

29 **REMARKS**

30 31 32 33 34 35 36 37 38 39 40 41 42 43 44 45 46 47 48 49 50 51 52 53 54 55 56 57 58

Figure N.2 (*continued*)

Copyright American Petroleum Institute
Reproduced by IHS under license with API
Document provided by IHS Licensee=TECNA/5935100001, 11/02/2004 06:04:35 MST
Questions or comments about this message: please call the Document Policy Group

Bibliography

[1] ISO 185, *Grey cast iron — Classification*

[2] ISO 683-1, *Heat-treatable steels, alloy steels and free-cutting steels — Part 1: Direct-hardening unalloyed and low-alloyed wrought steel in form of different black products*

[3] ISO 683-13:1986, *Heat-treatable steels, alloy steels and free-cutting steels — Part 13: Wrought stainless steels*

[4] ISO 683-18, *Heat-treatable steels, alloy steels and free-cutting steels — Part 18: Bright products of unalloyed and low alloy steels*

[5] ISO 2604-2, *Steel products for pressure purposes — Quality requirements — Part 2: Wrought seamless tubes*

[6] ISO 3448, *Industrial liquid lubricants — ISO viscosity classification*

[7] ISO 3740, *Acoustics — Determination of sound power levels of noise sources — Guidelines for the use of basic standards*

[8] ISO 3744, *Acoustics — Determination of sound power levels of noise sources using sound pressure — Engineering method in an essentially free field over a reflecting plane*

[9] ISO 3746, *Acoustics — Determination of sound power levels of noise sources using sound pressure — Survey method using an enveloping measurement surface over a reflecting plane*

[10] ISO 4991, *Steel castings for pressure purposes*

[11] ISO 14120, *Safety of machinery — Guards — General requirements for the design and construction of fixed and movable guards*

[12] EN 953, *Safety of machinery — Guards — General requirements for the design and construction of fixed and movable guards*

[13] EN 1561, *Founding — Grey cast irons*

[14] EN 10028-2, *Flat products made of steels for pressure purposes — Part 2: Non-alloy and alloy steels with specified elevated temperature properties*

[15] EN 10028-7, *Flat products made of steels for pressure purposes — Part 7: Stainless steels*

[16] EN 10083-1, *Quenched and tempered steels — Part 1: Technical delivery conditions for special steels*

[17] EN 10083-2, *Quenched and tempered steels — Part 2: Technical delivery conditions for unalloyed quality steels*

[18] EN 10088-1, *Stainless steels — Part 1: List of stainless steels*

[19] EN 10088-3, *Stainless steels — Part 3: Technical delivery conditions for semi-finished products, bars, rods and sections for general purposes*

[20] EN 10208-1, *Steel pipes for pipelines for combustible fluids — Technical delivery conditions — Part 1: Pipes of requirement class A*

[21] EN 10213-2, *Technical delivery conditions for steel castings for pressure purposes — Part 2: Steel grades for use at room temperature and elevated temperatures*

Copyright American Petroleum Institute
Reproduced by IHS under license with API
Document provided by IHS Licensee=TECNA/5935100001, 11/02/2004 06:04:35 MST
Questions or comments about this message: please call the Document Policy Group

[22] EN 10213-4, *Technical delivery conditions for steel castings for pressure purposes — Part 4: Austenitic and austenitic-ferritic steel grades*

[23] EN 10222-2, *Steel forgings for pressure purposes — Part 2: Ferritic and martensitic steels with specified elevated temperature properties*

[24] EN 10222-5, *Steel forgings for pressure purposes — Part 5: Martensitic, austenitic and austenitic-ferritic stainless steels*

[25] EN 10250-4, *Open die steel forgings for general engineering purposes — Part 4: Stainless steels*

[26] EN 10269, *Steels and nickel alloys for fasteners with specified elevated and/or low temperature properties*

[27] EN 10272, *Stainless steel bars for pressure purposes*

[28] EN 10273, *Hot rolled weldable steel bars for pressure purposes with specified elevated temperature properties*

[29] EN 10283, *Corrosion resistant steel castings*

[30] ABMA 9, *Load ratings and fatigue life for ball bearings*

[31] ABMA 20, *Metric ball and roller bearings (except tapered roller bearings) conforming to basic boundary plans: Boundary dimensions, tolerances, and identification*

[32] API Spec 5L, *Specification for line pipe*[1)]

[33] API 614, *Lubrication, shaft-sealing, and control-oil systems for special-purpose applications*

[34] API 682, *Shaft sealing systems for centrifugal and rotary pumps*

[35] API RP 686, *Machinery installation and installation design*

[36] ASME B1.20.1, *Pipe threads, general purpose (inch)*

[37] ASME B31.3, *Process piping*

[38] ASTM A48, *Standard specification for gray iron castings*

[39] ASTM A53, *Standard specification for pipe, steel, black and hot-dipped, zinc-coated, welded and seamless*

[40] ASTM A105, *Standard specification for carbon steel forgings for piping applications*

[41] ASTM A106, *Standard specification for seamless carbon steel pipe for high-temperature service*

[42] ASTM A153, *Standard specification for zinc coating (hot-dip) on iron and steel hardware*

[43] ASTM A181, *Standard specification for carbon steel forgings, for general-purpose piping*

[44] ASTM A182, *Standard specification for forged or rolled alloy-steel pipe flanges, forged fittings, and valves and parts for high-temperature service*

---

1) American Petroleum Institute, 1220 L Street NW, Washington, DC 20005-4070, USA.

Copyright American Petroleum Institute
Reproduced by IHS under license with API
Document provided by IHS Licensee=TECNA/5935100001, 11/02/2004 06:04:35 MST
Questions or comments about this message: please call the Document Policy Group

[45] ASTM A193, *Standard specification for alloy-steel and stainless steel bolting materials for high-temperature service*

[46] ASTM A194, *Standard specification for carbon and alloy steel nuts for bolts for high-pressure or high-temperature service, or both*

[47] ASTM A197, *Standard specification for cupola malleable iron*

[48] ASTM A216, *Standard specification for steel castings, carbon, suitable for fusion welding, for high-temperature service*

[49] ASTM A217, *Standard specification for steel castings, martensitic stainless and alloy, for pressure-containing parts, suitable for high-temperature service*

[50] ASTM A240, *Standard specification for chromium and chromium-nickel stainless steel plate, sheet, and strip for pressure vessels and for general applications*

[51] ASTM A266, *Standard specification for carbon steel forgings for pressure vessel components*

[52] ASTM A269, *Standard specification for seamless and welded austenitic stainless steel tubing for general service*

[53] ASTM A276, *Standard specification for stainless steel bars and shapes*

[54] ASTM A278, *Standard specification for gray iron castings for pressure-containing parts for temperatures up to 650 °F*

[55] ASTM A312, *Standard specification for seamless and welded austenitic stainless steel pipes*

[56] ASTM A338, *Standard specification for malleable iron flanges, pipe fittings, and valve parts for railroad, marine, and other heavy duty service at temperatures up to 650 °F (345 °C)*

[57] ASTM A351, *Standard specification for castings, austenitic, austenitic-ferritic (duplex), for pressure-containing parts*

[58] ASTM A352, *Standard specification for steel castings, ferritic and martensitic, for pressure-containing parts, suitable for low-temperature service*

[59] ASTM A434, *Standard specification for steel bars, alloy, hot-wrought or cold-finished, quenched and tempered*

[60] ASTM A473, *Standard specification for stainless steel forgings*

[61] ASTM A479, *Standard specification for stainless steel bars and shapes for use in boilers and other pressure vessels*

[62] ASTM A487, *Standard specification for steel castings suitable for pressure service*

[63] ASTM A515, *Standard specification for pressure vessel plates, carbon steel, for intermediate- and higher-temperature service*

[64] ASTM A516, *Standard specification for pressure vessel plates, carbon steel, for moderate- and lower-temperature service*

[65] ASTM A524, *Standard specification for seamless carbon steel pipe for atmospheric and lower temperatures*

[66] ASTM A576, *Standard specification for steel bars, carbon, hot-wrought, special quality*

--`,`,`,`,```,,,`,,,`,,,,,`,,-`-`,,`,,`,`,,`---

Copyright American Petroleum Institute
Reproduced by IHS under license with API

Document provided by IHS Licensee=TECNA/5935100001, 11/02/2004 06:04:35 MST
Questions or comments about this message: please call the Document Policy Group

[67] ASTM A582, *Standard specification for free-machining stainless steel bars*

[68] ASTM A696, *Standard specification for steel bars, carbon, hot-wrought or cold-finished, special quality, for pressure piping components*

[69] ASTM A743, *Standard specification for castings, iron-chromium, iron-chromium-nickel, corrosion resistant, for general application*

[70] ASTM A790, *Standard specification for seamless and welded ferritic/austenitic stainless steel pipe*

[71] ASTM A890, *Standard specification for castings, iron-chromium-nickel-molybdenum corrosion-resistant, duplex (austenitic/ferritic) for general application*

[72] JSA G 3106, *Rolled steels for welded structures*[2)]

[73] JSA G 3202, *Carbon steel forgings for pressure vessels*

[74] JSA G 3214, *Stainless steel forgings for pressure vessels*

[75] JSA G 3456, *Carbon steel pipes for high temperature service*

[76] JSA G 3459, *Stainless steel pipes*

[77] JSA G 4051, *Carbon steels for machine structural use*

[78] JSA G 4105, *Chromium molybdenum steels*

[79] JSA G 4107, *Alloy steel bolting materials for high temperature service*

[80] JSA G 4303, *Stainless steel bars*

[81] JSA G 4304, *Hot rolled stainless steel plates, sheets and strip*

[82] JSA G 4319, *Stainless steel blooms and billets for forgings*

[83] JSA G 5121, *Stainless steel castings*

[84] JSA G 5501, *Grey iron castings*

[85] JSA G 5151, *Steel castings for high temperature and high pressure service*

[86] *NACE Corrosion Engineer's Reference Book*

---

2) Japanese Industrial Standards, 1-24 Akaska 4 Minato-Ku, Tokyo, Japan 107.

Copyright American Petroleum Institute
Reproduced by IHS under license with API
Document provided by IHS Licensee=TECNA/5935100001, 11/02/2004 06:04:35 MST
Questions or comments about this message: please call the Document Policy Group

--`,`,`,`,```,,,`,,,`,,,,,`,,-`-`,,`,,`,`,,`---

Copyright American Petroleum Institute
Reproduced by IHS under license with API

Document provided by IHS Licensee=TECNA/5935100001, 11/02/2004 06:04:35 MST
Questions or comments about this message: please call the Document Policy Group

Additional copies are available through Global Engineering Documents at (800) 854-7179 or (303) 397-7956

Information about API Publications, Programs and Services is available on the World Wide Web at http://www.api.org

American Petroleum Institute

1220 L Street, Northwest
Washington, D.C. 20005-4070
202-682-8000

Product No: CX61010

Copyright American Petroleum Institute
Reproduced by IHS under license with API

Document provided by IHS Licensee=TECNA/5935100001, 11/02/2004 06:04:35 MST
Questions or comments about this message: please call the Document Policy Group at 303-397-2295.